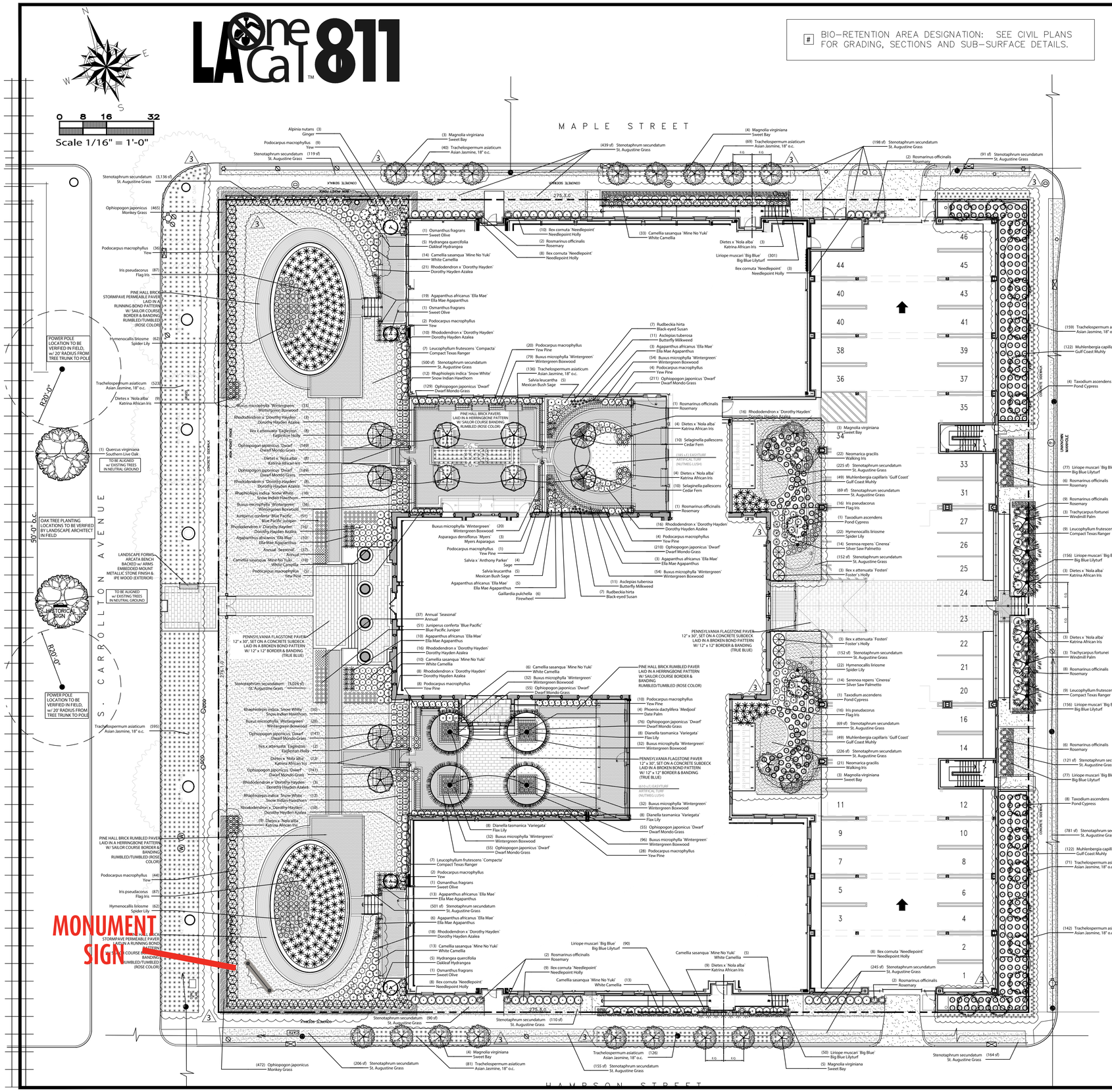

PLANT SCHEDULE			
TREES	QTY	BOTANICAL / COMMON NAME	CONT
	10	Ilex x attenuata `Eagleston` / Eagleston Holly Full to the Ground, 10`-12` Ht., 4`-5` Spd., Fully Rooted, Full & Balanced Canopy	30 gal
	23	Magnolia virginiana / Sweet Bay Multi Trunk, 8`-10` Ht., 6`-7` Spd., Fully Rooted, Full & Balanced Canopy	45 gal
	4	Osmanthus fragrans / Sweet Olive 7` Ht., 3-4` Spd., Fully Rooted, Full & Balanced Canopy. To be `Limbed Up` in the Field.	30 gal
	4	Phoenix dactylifera `Medjool` / Date Palm Classic Cut, 10` Clear Wood, Fully Rooted, Full & Balanced Canopy	10` CT
	2	Quercus virginiana / Southern Live Oak 10` Ht., 4` Spd., Fully Rooted, Full & Balanced Canopy	300 gal
	17	Taxodium ascendens / Pond Cypress 3" Cal., 15` Ht., 4-5` Spd., Fully Rooted, Full & Balanced Canopy	30 gal
	6	Trachycarpus fortunei / Windmill Palm Florida Fancy, Grade `A`, Straight Trunk, Full Canopy.	10` CT
SHRUBS	QTY	BOTANICAL / COMMON NAME	SIZE
	74	Agapanthus africanus `Ella Mae` / Ella Mae Agapanthus 12" Ht., 18" Spd., Fully Rooted, Full Foliage	3 gal
	3	Alpinia nutans / Ginger 24" Ht., 20" Spd., Fully Rooted, Full Foliage	3 gal
	22	Asclepias tuberosa / Butterfly Milkweed	1 gal
	3	Asparagus densiflorus `Myers` / Myers Asparagus	3 gal
	501	Buxus microphylla `Wintergreen` / Wintergreen Boxwood 8" Ht., 4" Spd., Fully Rooted, Full Foliage	3 gal
	101	Camellia sasanqua `Mine No Yuki` / White Camellia	3 gal
	32	Dianella tasmanica `Variegata` / Flax Lily	3 gal
	65	Dietes x `Nola alba` / Katrina African Iris	3 gal
	12	Gaillardia pulchella / Firewheel	1 gal
	10	Hydrangea quercifolia / Oakleaf Hydrangea	3 gal
	168	Hymenocallis liriosme / Spider Lily	3 gal
	45	Ilex cornuta `Needlepoint` / Needlepoint Holly 30" Ht., 24" Spd., Fully Rooted, Full Foliage	15 gal
	6	Ilex x attenuata `Fosteri` / Foster`s Holly 5` Ht., 3` Spd., Full to the Ground, Fully Rooted, Full Foliage	15 gal
	206	Iris pseudacorus / Flag Iris	1 gal
	102	Juniperus conferta `Blue Pacific` / Blue Pacific Juniper 6" Ht., 18" Spd., Fully Rooted, Full Foliage	1 gal
	32	Leucophyllum frutescens `Compacta` / Compact Texas Ranger	3 gal
	342	Muhlenbergia capillaris `Gulf Coast` / Gulf Coast Muhly 24" Ht., 20" Spd., Fully Rooted, Full Foliage	1 gal SIZE CHANGE
	43	Neomarica gracilis / Walking Iris	3 gal
	80	Podocarpus macrophyllus / Yew Pine 25" Ht., 16" Spd., Fully Rooted, Full Foliage	15 gal
	93	Podocarpus macrophyllus / Yew 36" Ht., 24" Spd., Fully Rooted, Full Foliage	30 gal
	44	Rhaphiolepis indica `Snow White` / Snow Indian Hawthorn 18" Ht., 18" Spd., Fully Rooted, Full Foliage	3 gal
	145	Rhododendron x `Dorothy Hayden` / Dorothy Hayden Azalea	3 gal
	38	Rosmarinus officinalis / Rosemary 24" Ht., 24" Spd., Fully Rooted, Full Foliage	3 gal
	14	Rudbeckia hirta / Black-eyed Susan	1 gal
	10	Salvia leucantha / Mexican Bush Sage	3 gal
	8	Salvia x `Anthony Parker` / Sage	1 gal
	20	Selaginella pallescens / Cedar Fern	1 gal
	28	Serenoa repens `Cinerea` / Silver Saw Palmetto	7 gal
	1,882	Trachelospermum asiaticum / Asian Jasmine, 18" o.c. Fully Rooted, Full Foliage, Space 18" o.c.	4"pot SIZE CHANGE
GROUND COVERS	QTY	BOTANICAL / COMMON NAME	CONT
	74	Annual `Seasonal` / Annual Fully Rooted, Full Foliage, Space 10" o.c.	4"pot
	913	Liriope muscari `Big Blue` / Big Blue Lilyturf Fully Rooted, Full Foliage, Space 8" o.c.	4"pot
	1,182	Ophiopogon japonicus / Monkey Grass Fully Rooted, Full Foliage, Space 12" o.c.	4"pot
	1,488	Ophiopogon japonicus `Dwarf` / Dwarf Mondo Grass Fully Rooted, Full Foliage, Space 6" o.c.	4"pot
SOD/SEED	QTY	BOTANICAL / COMMON NAME	CONT
	11,632 sf	Stenotaphrum secundatum / St. Augustine Grass	sod

HISTORIC DISTRICT LANDMARKS COMMISSION
12-19
wcargile
22
APPROVED

DALY SUBLETTE
LANDSCAPE ARCHITECTS
WWW.DALYSUBLETTE.COM
504-832-9775
+ MAINTENANCE + DESIGN + CONSTRUCTION

Carrollton Courthouse Renovations and Additions Assisted Living and Memory Care Facility

701 SOUTH CARROLLTON AVENUE
NEW ORLEANS, LA 70118

PROJECT NO.: 1811

SHEET TITLE
PLANTING PLAN FULL SITE

DATE
June 12, 2020

DRAWN BY
PSM

REVISION
VE. No. 1 8/31/20
VE No. 2 10/26/21
VE No. 3 2/08/22

PRODUCTION PHASE
Construcion Documents

L-3.0

SULLAWAY ENGINEERING
11545 WEST BERNARDO CT., SUITE 201
SAN DIEGO, CA 92127
PROJECTMANAGER@SULLAWAYENG.COM
PHONE: 1-858-312-5150 FAX: 1-858-777-3534

PROJECT: THE CARROLLTON, 701 S CARROLLTON AVE., NEW ORLEANS, LA
PROJECT #: 37735
CLIENT: ASI SIGNAGE INNOVATIONS

DATE: 12/1/22
ENGINEER: BF
LAST REVISED:

HISTORIC DISTRICT LANDMARKS COMMISSION
12-19
wcargile
22
APPROVED

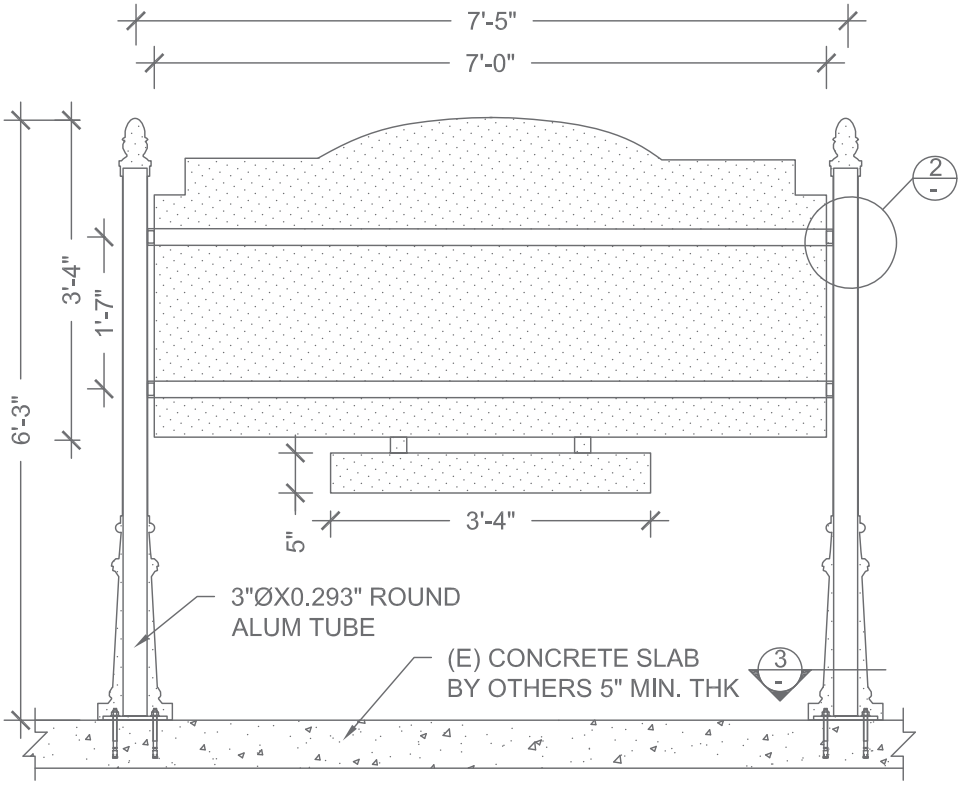

1 ELEVATION

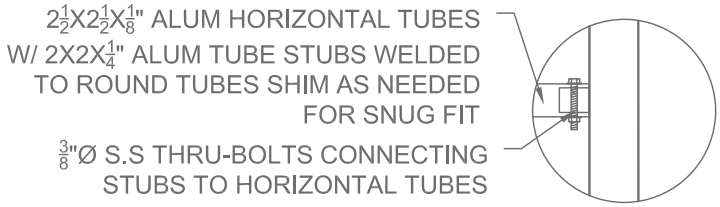

2 SECTION

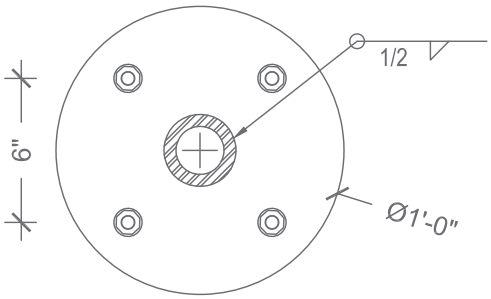

12"ØX½" ALUM BASE PLATE W/ (4) ⅝"Ø S.S HILTI KBTZ 2 ANCHORS 2¾" MIN. EMBED INTO CONCRETE

3 PLATE DETAILS

GENERAL NOTES

1. DESIGN CODE: IBC 2021
2. DESIGN LOADS: ASCE 7-16
3. WIND VELOCITY: 145 MPH EXPOSURE C
4. CONCRETE 2500 PSI MIN.
5. HILTI KBTZ 2 ANCHORS PER ICC ESR 4266
6. BOLT STAINLESS STEEL ASTM A304
7. ALUMINUM ELEMENTS 6061-T6
8. PROVIDE PROTECTION AGAINST DISSIMILAR METALS USING ANTI-CORROSIVE PAINT OR NEOPRENE GASKETS
9. ALL EXISTING ELEMENTS AND DIMENSIONS TO BE VERIFIED IN FIELD.
10. ALL DIMENSIONS TO BE VERIFIED PRIOR TO FABRICATION.

STATE OF LOUISIANA
MICHAEL F. SULLAWAY
License No. PE.0035675
PROFESSIONAL ENGINEER

SULLAWAY ENGINEERING
10815 Rancho Bernardo RD., SD, CA 92127
projectmanager@sullawayeng.com
Phone: 858-312-5150 Fax: 858-777-3534

PROJECT: THE CARROLLOTON DATE: 11/16/22
PROJ. NO.: 37735 ENGINEER: BF
CLIENT: ASI SIGNAGE INNOVATIONS

V5.5 units; pounds, feet unless noted otherwise

HISTORIC DISTRICT LANDMARKS COMMISSION APPROVED 12-19 wcargile 22

Applied Wind Loads; from ASCE 7-16

$F=q_z*G*C_f*A_f$ with $q_z = 0.00256K_zK_{zt}K_dV^2$ (29.3.2 & 29.4)

C_f= 1.550 (Fig. 29.3-1) 2 pole Cf factor= 0.92 7.25 max. height= 6.3

K_{zt}= 1.0 (26.8.2) (=1.0 unless unusual landscape) s= 3.33

K_z= from table 28.3-1 Exposure= c

K_d= 0.85 for signs (table 26.6-1)

V= 145 mph

G= 0.85 (26.9) weight= 0.232 kips

s/h= 0.531 M_{DL}= 0.00 k-ft

B/s= 2.10

Pole Loads	structure component	height at section c.g.	K_z	q_z	pressure q_z*G*C_f	A_f	shear	Wind Moment M_W			
	1	3.1	0.850	38.9	51.24	23.2	1187	3729			
					sums:	23.2	1187	3.73	(M_w)	k-ft	arm= 3.1
	two pole distribution factor *b*s (asce fig. 29.4-1):				x 0.63		742	2.3			

P_u= 0.28 kip M= 2.33 k-ft $M=sqrt(M_{DL}^2+M_w^2)$

$M_u=sqrt(1.2M_{DL}^2+1.0M_W^2)$ = 2.33 k-ft

Pole Design section; pipe

$M_u \leq \phi M_n$ with $M_n = f_yZ$ f_y= 46 ksi ϕ= 0.9

H	M_u(k-ft)	Z req'd. (in)	Size(in)	t (in)	Z	Use
at grade	2.3	0.68	2	0.154	0.7	see pg 5 for Alum capacity

SULLAWAY ENGINEERING
10815 Rancho Bernardo RD., SD, CA 92127
projectmanager@sullawayeng.com
Phone: 858-312-5150 Fax: 858-777-3534

PROJECT: THE CARROLLOTON
PROJ. NO.: 37735
CLIENT: ASI SIGNAGE INNOVATIONS

DATE: 11/16/2022
ENGINEER: BF

V5.5

units; pounds, feet unless noted otherwise

HISTORIC DISTRICT LANDMARKS COMMISSION
12-19
lwcargile
22
APPROVED

Loads for horizontal alum tubes

Trib. Width = 20" =	1.7	ft			Length =	7 ft
Dead Load=1.2*1.8psf*Trib. Width=	3.6	lb/ft				
Wind Load= Pnet*Trib. Width=	85.4	lb/ft				
M_{DL} = DL*L^2/8 =	22.05	lb-ft	=	0.2646	k-in	
M_{WL} = WL*L^2/8 =	523.1	lb-ft	=	6.28	k-in	
M_u = MWL+MDL =	545.1	lb-ft	=	6.54	k-in	

Check 12" diameter x 0.5" plate

M_p = n*T* arm =	6.2	k-in		Section:	Round	
Z = bt^2/4 =	0.75	in^3		d =	3	in
$\phi M_n = \phi F_y Z$ =	10.1	k-in	OK	arm =	1.8	in
				b =	12	in
				t =	0.5	in
				ϕ =	0.9	
				F_y =	15	ksi
			(per HILTI)	T =	1.713	kip

SULLAWAY ENGINEERING
11545 West Bernardo Court., SD, CA 92127
projectmanager@sullawayeng.com
Phone: 858-312-5150 Fax: 858-777-3534

PROJECT: THE CARROLLOTON
PROJ. NO.: 37735
CLIENT: ASI SIGNAGE INNOVATIONS

DATE: 11/16/22
ENGINEER: BF

HISTORIC DISTRICT LANDMARKS COMMISSION
12-19
wdargile
22
APPROVED

Check 0.375" dia. Thru-Bolts Connecting Stub to Horizontal Tubes (AISC 14 J3)

Trib. Area = (84")*(40") =	23.3	ft2		ϕ =	0.75
Dead Load=1.2*10psf*Trib. Area=	280	lbs		F_u =	58 ksi
Wind Load= Pnet*Trib. Area=	1196	lbs		F_{nt} =	43.5 ksi
				F'_{nt} =	43.5 ksi
				F_{nv} =	26.1 ksi
T = DL/4 =	0.07	kip		d_b =	0.375 in
V = WL/4 =	0.299	kip		A_b =	0.110 in^2
$T_{capacity}=\phi F_{nt}A_{bolt}$=	3.728	kip	OK		
$V_{capacity}=\phi F_{nv}A_{bolt}$=	2.237	kip	OK		
Load Combinations=$T/T_C+V/V_C<1$	0.152		OK		

SULLAWAY ENGINEERING
11545 West Bernardo Court, SD, CA 92127
projectmanager@sullawayeng.com
Phone: 858-312-5150 Fax: 858-777-3534
www.sullawayeng.com

PROJECT: THE CARROLLTON
PROJ. NO.: 37735
CLIENT: ASI SIGNAGE INNOVATIONS

DATE: 12/14/2022
ENGINEER: BF

Check 3" dia. x 0.293" aluminum tube (ADM 2015 - CH. 15)

	Mw = WL * arm =	27.96	k-in	d	t	
				3	0.293	
Yielding (Governs)	Mn = Fy Z =	32.33	k-in	welded?	y	
(ADM 15, F.2)	Mn = 1.5 Fy S =	34.64	k-in	φ =	0.9	
				Fy =	15	ksi
LB:	$\lambda 1 = (Bt\text{-}Fcy/Dt)^2$ =	47.34		Z =	2.155	in^3
(ADM 15 F.3.1)	λ2 = Ct =	389		S =	1.539	in^3
	Rb/t =	4.62	< λ1	Bt =	19.5	ksi
				Dt =	0.654	ksi
	Fc = Fy =	15	ksi	Ct =	389	
				E =	10100	ksi
	λ1 = Ctb =	120.8		Btb =	29.2	ksi
	λ2 = Ct =	389		Dtb =	1.539	ksi
	Rb/t =	4.62	< λ1	Ctb =	120.8	
				If =	2.309	in^4
	Fb = Btb-Dtb (Rb/t)^1/2 =	25.892	ksi	Iw =	2.309	in^4
				ccf =	1.354	in
	Mnlb = Fc If / ccf + Fb Iw / ccw =	65.45	k-in	ccw =	1.500	in
	φMn =	29.10	k-in OK			

HISTORIC DISTRICT LANDMARKS COMMISSION
12-19
wcargile
22
APPROVED

SULLAWAY ENGINEERING
11545 West Bernardo Court, SD, CA 92127
projectmanager@sullawayeng.com
Phone: 858-312-5150 Fax: 858-777-3534
www.sullawayeng.com

PROJECT: THE CARROLLTON
PROJ. NO.: 37735
CLIENT: ASI SIGNAGE SOLUTIONS

DATE: 12/14/2022
ENGINEER: BF

Check 2"x2"x0.25" Sq. Aluminum Tube Stub (ADM 2015, Ch F)

HISTORIC DISTRICT LANDMARKS COMMISSION APPROVED 12-19 wcargile 22

	Mu =	6.54	k-in		d	
Yielding:	(Governs)				2	0.2
(ADM 15, F.2)	Mn = Z Fcy =	17.3	k-in		welded?	yes
	Mn = 1.5 St Fty =	20.5	k-in		Fcy = Fty =	15 ksi
					Z =	1.156 in^3
	φMn =	15.6	k-in	OK	St =	0.911 in^3
LB:					φ =	0.9
(ADM 15 F.3.1)	Bp =	19.9	ksi		κ =	1 ksi
	Dp =	0.11	ksi		E =	10100 ksi
	Cp =	122.7			k1c =	0.35
					k2c =	2.27
	λ1 = Bp-Fcy/1.6Dp =	28.4			k1f =	0.5
	λ2 = k1 Bp/1.6Dp =	57.4			k2f =	2.04
					b/t =	6.0
	since b/t< λ1: Fc = Fcy =	15.00			m =	0.65
					I =	0.911 in^4
	Bbr =	26.4	ksi		ccf =	0.875 in
	Dbr =	0.17	ksi		ccw =	1.0 in
	Cbr =	107				
	λ1 = Bbr-1.5 Fcy/mDbr =	36.4				
	λ2 = k1 Bbr/mDbr =	123.1				
	since b/t< λ1: Fc = 1.5 Fcy =	22.50				
	Mnlb = Fc If / ccf + Fb Iw / ccw =	36.13	k-in			
	φMnlb =	32.52	k-in	OK		

SULLAWAY ENGINEERING
11545 West Bernardo Court, SD, CA 92127
projectmanager@sullawayeng.com
Phone: 858-312-5150 Fax: 858-777-3534
www.sullawayeng.com

PROJECT: THE CARROLLTON
PROJ. NO.: 37735
CLIENT: ASI SIGNAGE SOLUTIONS

DATE: 12/14/2022
ENGINEER: BF

Check 2.5"x2.5"x0.125" Sq. Aluminum Tube Stub (ADM 2015 - Ch F)

	Mu =	6.54	k-in		d	t
Yielding:	(Governs)				2.5	0.1
(ADM 15, F.2)	Mn = Z Fcy =	15.9	k-in		welded?	yes
	Mn = 1.5 St Fty =	20.2	k-in		Fcy = Fty =	15 ksi
					Z =	1.059 in^3
	φMn =	14.3	k-in	OK	St =	0.896 in^3
LB:					φ =	0.9
(ADM 15 F.3.1)	Bp =	19.9	ksi		κ =	1 ksi
	Dp =	0.11	ksi		E =	10100 ksi
	Cp =	122.7			k1c =	0.35
					k2c =	2.27
	λ1 = Bp-Fcy/1.6Dp =	28.4			k1f =	0.5
	λ2 = k1 Bp/1.6Dp =	57.4			k2f =	2.04
					b/t =	18.0
	since b/t< λ1: Fc = Fcy =	15.00			m =	0.65
					I =	1.119 in^4
	Bbr =	26.4	ksi		ccf =	1.188 in
	Dbr =	0.17	ksi		ccw =	1.3 in
	Cbr =	107				
	λ1 = Bbr-1.5 Fcy/mDbr =	36.4				
	λ2 = k1 Bbr/mDbr =	123.1				
	since b/t< λ1: Fc = 1.5 Fcy =	22.50				
	Mnlb = Fc If / ccf + Fb Iw / ccw =	34.29	k-in			
	φMnlb =	30.86	k-in	OK		

HISTORIC DISTRICT LANDMARKS COMMISSION
12-19
wcargile
22
APPROVED

Hilti PROFIS Engineering 3.0.81

www.hilti.com

Company:		Page:	1
Address:		Specifier:	
Phone I Fax:	|	E-Mail:	
Design:	Concrete - Dec 6, 2022	Date:	12/8/2022
Fastening point:			

Specifier's comments:

1 Input data

Anchor type and diameter:	**Kwik Bolt TZ2 - SS 304 5/8 (2 3/4) hnom1**
Item number:	2210278 KB-TZ2 5/8x4 3/4 SS304
Effective embedment depth:	$h_{ef,act}$ = 2.750 in., h_{nom} = 3.250 in.
Material:	AISI 304
Evaluation Service Report:	ESR-4266
Issued I Valid:	12/17/2021 | 12/1/2023
Proof:	Design Method ACI 318-19 / Mech
Stand-off installation:	e_b = 0.000 in. (no stand-off); t = 0.500 in.
Anchor plate[R] :	l_x x l_y x t = 12.000 in. x 12.000 in. x 0.500 in.; (Recommended plate thickness: not calculated)
Profile:	Round HSS (AISC), HSS3X.203; (L x W x T) = 3.000 in. x 3.000 in. x 0.203 in.
Base material:	cracked concrete, 2500, f_c' = 2,500 psi; h = 5.000 in.
Installation:	**hammer drilled hole, Installation condition: Dry**
Reinforcement:	tension: not present, shear: not present; no supplemental splitting reinforcement present edge reinforcement: none or < No. 4 bar

[R] - The anchor calculation is based on a rigid anchor plate assumption.

Geometry [in.] & Loading [lb, ft.lb]

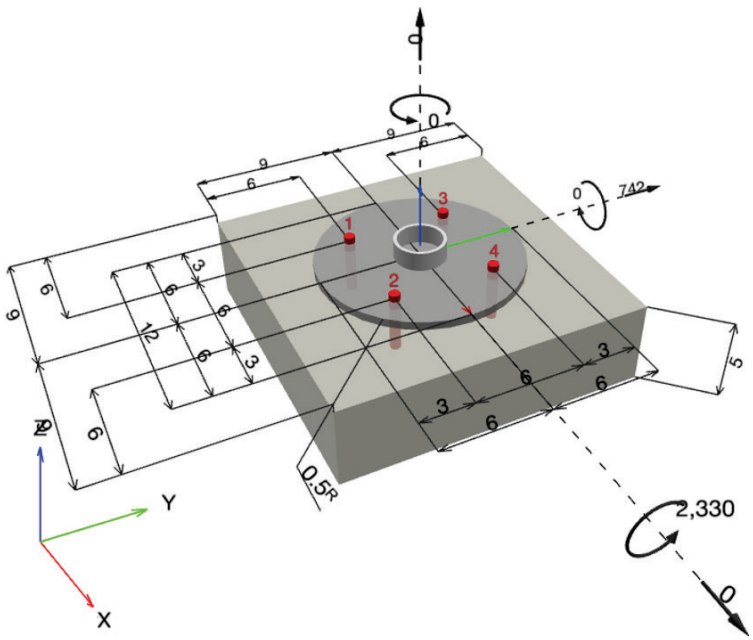

PROFIS Engineering (c) 2003-2022 Hilti AG, FL-9494 Schaan Hilti is a registered Trademark of Hilti AG, Schaan

Hilti PROFIS Engineering 3.0.81

www.hilti.com

Company:		Page:	2
Address:		Specifier:	
Phone I Fax:	|	E-Mail:	
Design:	Concrete - Dec 6, 2022	Date:	12/8/2022
Fastening point:			

HISTORIC DISTRICT LANDMARKS COMMISSION
12-19
22
APPROVED

1.1 Design results

Case	Description	Forces [lb] / Moments [ft.lb]	Seismic	Max. [illegible] anchor [%]
1	Combination 1	$N = 0$; $V_x = 0$; $V_y = 742$; $M_x = 2{,}330.000$; $M_y = 0.000$; $M_z = 0.000$;	no	[illegible]

2 Load case/Resulting anchor forces

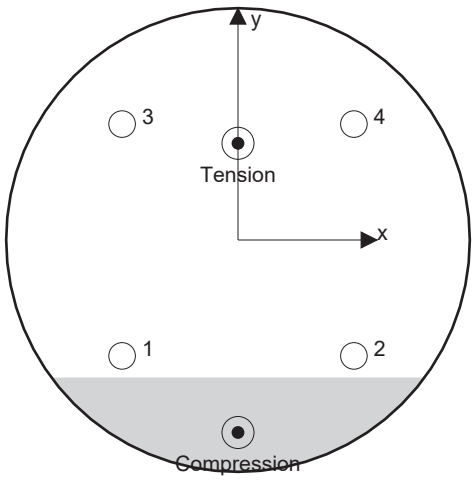

Anchor reactions [lb]
Tension force: (+Tension, -Compression)

Anchor	Tension force	Shear force	Shear force x	Shear force y
1	155	185	0	185
2	155	185	0	185
3	1,713	185	0	185
4	1,713	185	0	185

max. concrete compressive strain:	0.13 [‰]
max. concrete compressive stress:	571 [psi]
resulting tension force in (x/y)=(0.000/2.502):	3,736 [lb]
resulting compression force in (x/y)=(-0.000/-4.982):	3,736 [lb]

Anchor forces are calculated based on the assumption of a rigid anchor plate.

3 Tension load

	Load N_{ua} [lb]	Capacity ϕ N_n [lb]	Utilization $\beta_N = N_{ua}/\phi$ N_n	Status
Steel Strength*	1,713	14,132	13	OK
Pullout Strength*	N/A	N/A	N/A	N/A
Concrete Breakout Failure**	3,736	5,780	65	OK

* highest loaded anchor **anchor group (anchors in tension)

Input data and results must be checked for conformity with the existing conditions and for plausibility!
PROFIS Engineering (c) 2003-2022 Hilti AG, FL-9494 Schaan Hilti is a registered Trademark of Hilti AG, Schaan

Hilti PROFIS Engineering 3.0.81

www.hilti.com

Company:		Page:	3
Address:		Specifier:	
Phone I Fax:	|	E-Mail:	
Design:	Concrete - Dec 6, 2022	Date:	12/8/2022
Fastening point:			

HISTORIC DISTRICT LANDMARKS COMMISSION
12-19
wcargile
22
APPROVED

3.1 Steel Strength

N_{sa} = ESR value	refer to ICC-ES ESR-4266
$\phi\ N_{sa} \geq N_{ua}$	ACI 318-19 Table 17.5.2

Variables

$A_{se,N}$ [in.^{2}]	f_{uta} [psi]
0.16	114,604

Calculations

N_{sa} [lb]
18,843

Results

N_{sa} [lb]	ϕ_{steel}	$\phi\ N_{sa}$ [lb]	N_{ua} [lb]
18,843	0.750	14,132	1,713

Input data and results must be checked for conformity with the existing conditions and for plausibility!
PROFIS Engineering (c) 2003-2022 Hilti AG, FL-9494 Schaan Hilti is a registered Trademark of Hilti AG, Schaan

Hilti PROFIS Engineering 3.0.81

www.hilti.com

Company:		Page:	4
Address:		Specifier:	
Phone I Fax:	|	E-Mail:	
Design:	Concrete - Dec 6, 2022	Date:	12/8/2022
Fastening point:			

HISTORIC DISTRICT LANDMARKS COMMISSION
12-19
wcargile
22
APPROVED

3.2 Concrete Breakout Failure

$N_{cbg} = \left(\frac{A_{Nc}}{A_{Nc0}}\right) \psi_{ec,N}\ \psi_{ed,N}\ \psi_{c,N}\ \psi_{cp,N}\ N_b$ — ACI 318-19 Eq. (17.6.2.1b)

$\phi\ N_{cbg} \geq N_{ua}$ — ACI 318-19 Table 17.5.2

A_{Nc} see ACI 318-19, Section 17.6.2.1, Fig. R 17.6.2.1(b)

$A_{Nc0} = 9\ h_{ef}^2$ — ACI 318-19 Eq. (17.6.2.1.4)

$\psi_{ec,N} = \left(\frac{1}{1 + \frac{2\ e'_N}{3\ h_{ef}}}\right) \leq 1.0$ — ACI 318-19 Eq. (17.6.2.3.1)

$\psi_{ed,N} = 0.7 + 0.3\left(\frac{c_{a,min}}{1.5h_{ef}}\right) \leq 1.0$ — ACI 318-19 Eq. (17.6.2.4.1b)

$\psi_{cp,N} = \text{MAX}\left(\frac{c_{a,min}}{c_{ac}}, \frac{1.5h_{ef}}{c_{ac}}\right) \leq 1.0$ — ACI 318-19 Eq. (17.6.2.6.1b)

$N_b = k_c\ \lambda_a\ \sqrt{f'_c}\ h_{ef}^{1.5}$ — ACI 318-19 Eq. (17.6.2.2.1)

Variables

h_{ef} [in.]	$e_{c1,N}$ [in.]	$e_{c2,N}$ [in.]	$c_{a,min}$ [in.]	$\psi_{c,N}$
2.750	0.000	2.502	6.000	1.000

c_{ac} [in.]	k_c	λ_a	f'_c [psi]
10.000	21	1.000	2,500

Calculations

A_{Nc} [in.^{2}]	A_{Nc0} [in.^{2}]	$\psi_{ec1,N}$	$\psi_{ec2,N}$	$\psi_{ed,N}$	$\psi_{cp,N}$	N_b [lb]
203.06	68.06	1.000	0.622	1.000	1.000	4,788

Results

N_{cbg} [lb]	$\phi_{concrete}$	$\phi\ N_{cbg}$ [lb]	N_{ua} [lb]
8,892	0.650	5,780	3,736

Input data and results must be checked for conformity with the existing conditions and for plausibility!
PROFIS Engineering (c) 2003-2022 Hilti AG, FL-9494 Schaan Hilti is a registered Trademark of Hilti AG, Schaan

Hilti PROFIS Engineering 3.0.81

www.hilti.com

Company:		Page:	5
Address:		Specifier:	
Phone I Fax:	|	E-Mail:	
Design:	Concrete - Dec 6, 2022	Date:	12/8/2022
Fastening point:			

HISTORIC DISTRICT LANDMARKS COMMISSION
12-19
wcargile
22
APPROVED

4 Shear load

	Load V_{ua} [lb]	Capacity ϕ V_n [lb]	Utilization $\beta_V = V_{ua}/\phi$ V_n	Status
Steel Strength*	185	8,034	3	OK
Steel failure (with lever arm)*	N/A	N/A	N/A	N/A
Pryout Strength**	742	20,000	4	OK
Concrete edge failure in direction y+**	742	2,854	27	OK

* highest loaded anchor **anchor group (relevant anchors)

4.1 Steel Strength

V_{sa} = ESR value refer to ICC-ES ESR-4266
ϕ $V_{steel} \geq V_{ua}$ ACI 318-19 Table 17.5.2

Variables

$A_{se,V}$ [in.^{2}]	f_{uta} [psi]
0.16	114,604

Calculations

V_{sa} [lb]
12,360

Results

V_{sa} [lb]	ϕ_{steel}	ϕ V_{sa} [lb]	V_{ua} [lb]
12,360	0.650	8,034	185

Input data and results must be checked for conformity with the existing conditions and for plausibility!
PROFIS Engineering (c) 2003-2022 Hilti AG, FL-9494 Schaan Hilti is a registered Trademark of Hilti AG, Schaan

Hilti PROFIS Engineering 3.0.81

www.hilti.com

Company:		Page:	6
Address:		Specifier:	
Phone I Fax:	|	E-Mail:	
Design:	Concrete - Dec 6, 2022	Date:	12/8/2022
Fastening point:			

HISTORIC DISTRICT LANDMARKS COMMISSION
12-19
wcargile
22
APPROVED

4.2 Pryout Strength

$V_{cpg} = k_{cp} \left[\left(\frac{A_{Nc}}{A_{Nc0}} \right) \psi_{ec,N} \; \psi_{ed,N} \; \psi_{c,N} \; \psi_{cp,N} \; N_b \right]$ — ACI 318-19 Eq. (17.7.3.1b)

$\phi \; V_{cpg} \geq V_{ua}$ — ACI 318-19 Table 17.5.2

A_{Nc} see ACI 318-19, Section 17.6.2.1, Fig. R 17.6.2.1(b)

$A_{Nc0} = 9 \, h_{ef}^2$ — ACI 318-19 Eq. (17.6.2.1.4)

$\psi_{ec,N} = \left(\frac{1}{1 + \frac{2 \, e_N'}{3 \, h_{ef}}} \right) \leq 1.0$ — ACI 318-19 Eq. (17.6.2.3.1)

$\psi_{ed,N} = 0.7 + 0.3 \left(\frac{c_{a,min}}{1.5 h_{ef}} \right) \leq 1.0$ — ACI 318-19 Eq. (17.6.2.4.1b)

$\psi_{cp,N} = \text{MAX}\left(\frac{c_{a,min}}{c_{ac}}, \frac{1.5 h_{ef}}{c_{ac}} \right) \leq 1.0$ — ACI 318-19 Eq. (17.6.2.6.1b)

$N_b = k_c \; \lambda_a \; \sqrt{f_c'} \; h_{ef}^{1.5}$ — ACI 318-19 Eq. (17.6.2.2.1)

Variables

k_{cp}	h_{ef} [in.]	$e_{c1,N}$ [in.]	$e_{c2,N}$ [in.]	$c_{a,min}$ [in.]
2	2.750	0.000	0.000	6.000

$\psi_{c,N}$	c_{ac} [in.]	k_c	λ_a	f_c' [psi]
1.000	10.000	21	1.000	2,500

Calculations

A_{Nc} [in.^{2}]	A_{Nc0} [in.^{2}]	$\psi_{ec1,N}$	$\psi_{ec2,N}$	$\psi_{ed,N}$	$\psi_{cp,N}$	N_b [lb]
203.06	68.06	1.000	1.000	1.000	1.000	4,788

Results

V_{cpg} [lb]	$\phi_{concrete}$	$\phi \; V_{cpg}$ [lb]	V_{ua} [lb]
28,572	0.700	20,000	742

Input data and results must be checked for conformity with the existing conditions and for plausibility!
PROFIS Engineering (c) 2003-2022 Hilti AG, FL-9494 Schaan Hilti is a registered Trademark of Hilti AG, Schaan

Hilti PROFIS Engineering 3.0.81

www.hilti.com

Company:		Page:	7
Address:		Specifier:	
Phone I Fax:	|	E-Mail:	
Design:	Concrete - Dec 6, 2022	Date:	12/8/2022
Fastening point:			

HISTORIC DISTRICT LANDMARKS COMMISSION
12-19
wcargile
22
APPROVED

4.3 Concrete edge failure in direction y+

$V_{cbg} = \left(\frac{A_{Vc}}{A_{Vc0}}\right) \psi_{ec,V}\ \psi_{ed,V}\ \psi_{c,V}\ \psi_{h,V}\ \psi_{parallel,V}\ V_b$ — ACI 318-19 Eq. (17.7.2.1b)

$\phi\ V_{cbg} \geq V_{ua}$ — ACI 318-19 Table 17.5.2

A_{Vc} see ACI 318-19, Section 17.7.2.1, Fig. R 17.7.2.1(b)

$A_{Vc0} = 4.5\ c_{a1}^2$ — ACI 318-19 Eq. (17.7.2.1.3)

$\psi_{ec,V} = \left(\frac{1}{1 + \frac{e_v'}{1.5c_{a1}}}\right) \leq 1.0$ — ACI 318-19 Eq. (17.7.2.3.1)

$\psi_{ed,V} = 0.7 + 0.3\left(\frac{c_{a2}}{1.5c_{a1}}\right) \leq 1.0$ — ACI 318-19 Eq. (17.7.2.4.1b)

$\psi_{h,V} = \sqrt{\frac{1.5c_{a1}}{h_a}} \geq 1.0$ — ACI 318-19 Eq. (17.7.2.6.1)

$V_b = \left(7\left(\frac{l_e}{d_a}\right)^{0.2} \sqrt{d_a}\right) \lambda_a \sqrt{f_c'}\ c_{a1}^{1.5}$ — ACI 318-19 Eq. (17.7.2.2.1a)

Variables

c_{a1} [in.]	c_{a2} [in.]	e_{cV} [in.]	$\psi_{c,V}$	h_a [in.]
4.000	6.000	0.000	1.000	5.000

l_e [in.]	λ_a	d_a [in.]	f_c' [psi]	$\psi_{parallel,V}$
2.750	1.000	0.625	2,500	1.000

Calculations

A_{Vc} [in.^{2}]	A_{Vc0} [in.^{2}]	$\psi_{ec,V}$	$\psi_{ed,V}$	$\psi_{h,V}$	V_b [lb]
90.00	72.00	1.000	1.000	1.095	2,977

Results

V_{cbg} [lb]	$\phi_{concrete}$	$\phi\ V_{cbg}$ [lb]	V_{ua} [lb]
4,077	0.700	2,854	742

5 Combined tension and shear loads, per ACI 318-19 section 17.8

β_N	β_V	ζ	Utilization $\beta_{N,V}$ [%]	Status
0.646	0.260	5/3	59	OK

$\beta_{NV} = \beta_N^{\zeta} + \beta_V^{\zeta} <= 1$

Input data and results must be checked for conformity with the existing conditions and for plausibility!
PROFIS Engineering (c) 2003-2022 Hilti AG, FL-9494 Schaan Hilti is a registered Trademark of Hilti AG, Schaan

Hilti PROFIS Engineering 3.0.81

www.hilti.com

Company:		Page:	8
Address:		Specifier:	
Phone I Fax:	|	E-Mail:	
Design:	Concrete - Dec 6, 2022	Date:	12/8/2022
Fastening point:			

HISTORIC DISTRICT LANDMARKS COMMISSION
12-19
wcargile
22
APPROVED

6 Warnings

- The anchor design methods in PROFIS Engineering require rigid anchor plates per current regulations (AS 5216:2021, ETAG 001/Annex C, EOTA TR029 etc.). This means load re-distribution on the anchors due to elastic deformations of the anchor plate are not considered. The anchor plate is assumed to be sufficiently stiff, in order not to be deformed when subjected to the design loading. PROFIS Engineering calculates the minimum required anchor plate thickness with CBFEM to limit the stress of the anchor plate based on the assumptions explained above. The proof if the rigid anchor plate assumption is valid is not carried out by PROFIS Engineering. Input data and results must be checked for agreement with the existing conditions and for plausibility!
- Condition A applies where the potential concrete failure surfaces are crossed by supplementary reinforcement proportioned to tie the potential concrete failure prism into the structural member. Condition B applies where such supplementary reinforcement is not provided, or where pullout or pryout strength governs.
- Refer to the manufacturer's product literature for cleaning and installation instructions.
- For additional information about ACI 318 strength design provisions, please go to https://submittals.us.hilti.com/PROFISAnchorDesignGuide/
- Hilti post-installed anchors shall be installed in accordance with the Hilti Manufacturer's Printed Installation Instructions (MPII). Reference ACI 318-19, Section 26.7.

Fastening meets the design criteria!

PROFIS Engineering (c) 2003-2022 Hilti AG, FL-9494 Schaan Hilti is a registered Trademark of Hilti AG, Schaan

Hilti PROFIS Engineering 3.0.81

www.hilti.com

Company:		Page:	9
Address:		Specifier:	
Phone I Fax:	|	E-Mail:	
Design:	Concrete - Dec 6, 2022	Date:	12/8/2022
Fastening point:			

HISTORIC DISTRICT LANDMARKS COMMISSION
12-19
wcargile
22
APPROVED

7 Installation data

Anchor type and diameter: Kwik Bolt TZ2 - SS 304 5/8 (2 3/4) hnom1

Item number: 2210278 KB-TZ2 5/8x4 3/4 SS304

Profile: Round HSS (AISC), HSS3X.203; (L x W x T) = 3.000 in. x 3.000 in. x 0.203 in.

Hole diameter in the fixture: d_f = 0.687 in.

Plate thickness (input): 0.500 in.

Recommended plate thickness: not calculated

Drilling method: Hammer drilled

Cleaning: Manual cleaning of the drilled hole according to instructions for use is required.

Maximum installation torque: 60.185 ft.lb

Hole diameter in the base material: 0.625 in.

Hole depth in the base material: 3.750 in.

Minimum thickness of the base material: 5.000 in.

Hilti KB-TZ2 stud anchor with 3.25 in embedment, 5/8 (2 3/4) hnom1, Stainless steel, installation per ESR-4266

7.1 Recommended accessories

Drilling	Cleaning	Setting
• Suitable Rotary Hammer • Properly sized drill bit	• Manual blow-out pump	• Torque controlled cordless impact tool • Torque wrench • Hammer

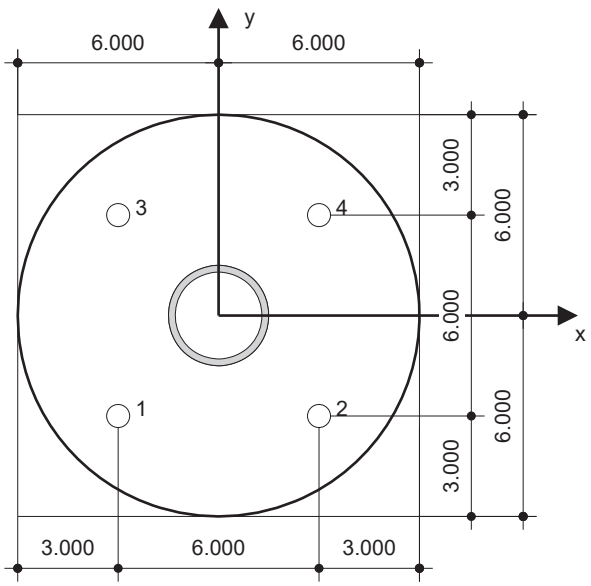

Coordinates Anchor [in.]

Anchor	x	y	c_{-x}	c_{+x}	c_{-y}	c_{+y}
1	-3.000	-3.000	6.000	12.000	6.000	12.000
2	3.000	-3.000	12.000	6.000	6.000	12.000
3	-3.000	3.000	6.000	12.000	12.000	6.000
4	3.000	3.000	12.000	6.000	12.000	6.000

Input data and results must be checked for conformity with the existing conditions and for plausibility!
PROFIS Engineering (c) 2003-2022 Hilti AG, FL-9494 Schaan Hilti is a registered Trademark of Hilti AG, Schaan

Hilti PROFIS Engineering 3.0.81

www.hilti.com

Company:		Page:	10
Address:		Specifier:	
Phone I Fax:	|	E-Mail:	
Design:	Concrete - Dec 6, 2022	Date:	12/8/2022
Fastening point:			

HISTORIC DISTRICT LANDMARKS COMMISSION
APPROVED
12-19
wcargile
22

8 Remarks; Your Cooperation Duties

- Any and all information and data contained in the Software concern solely the use of Hilti products and are based on the principles, formulas and security regulations in accordance with Hilti's technical directions and operating, mounting and assembly instructions, etc., that must be strictly complied with by the user. All figures contained therein are average figures, and therefore use-specific tests are to be conducted prior to using the relevant Hilti product. The results of the calculations carried out by means of the Software are based essentially on the data you put in. Therefore, you bear the sole responsibility for the absence of errors, the completeness and the relevance of the data to be put in by you. Moreover, you bear sole responsibility for having the results of the calculation checked and cleared by an expert, particularly with regard to compliance with applicable norms and permits, prior to using them for your specific facility. The Software serves only as an aid to interpret norms and permits without any guarantee as to the absence of errors, the correctness and the relevance of the results or suitability for a specific application.
- You must take all necessary and reasonable steps to prevent or limit damage caused by the Software. In particular, you must arrange for the regular backup of programs and data and, if applicable, carry out the updates of the Software offered by Hilti on a regular basis. If you do not use the AutoUpdate function of the Software, you must ensure that you are using the current and thus up-to-date version of the Software in each case by carrying out manual updates via the Hilti Website. Hilti will not be liable for consequences, such as the recovery of lost or damaged data or programs, arising from a culpable breach of duty by you.

PROFIS Engineering (c) 2003-2022 Hilti AG, FL-9494 Schaan Hilti is a registered Trademark of Hilti AG, Schaan

Sign Type: 14.0 - Monument

Total Qty: 1

HISTORIC DISTRICT LANDMARKS COMMISSION
12-19
wcargile
22
APPROVED

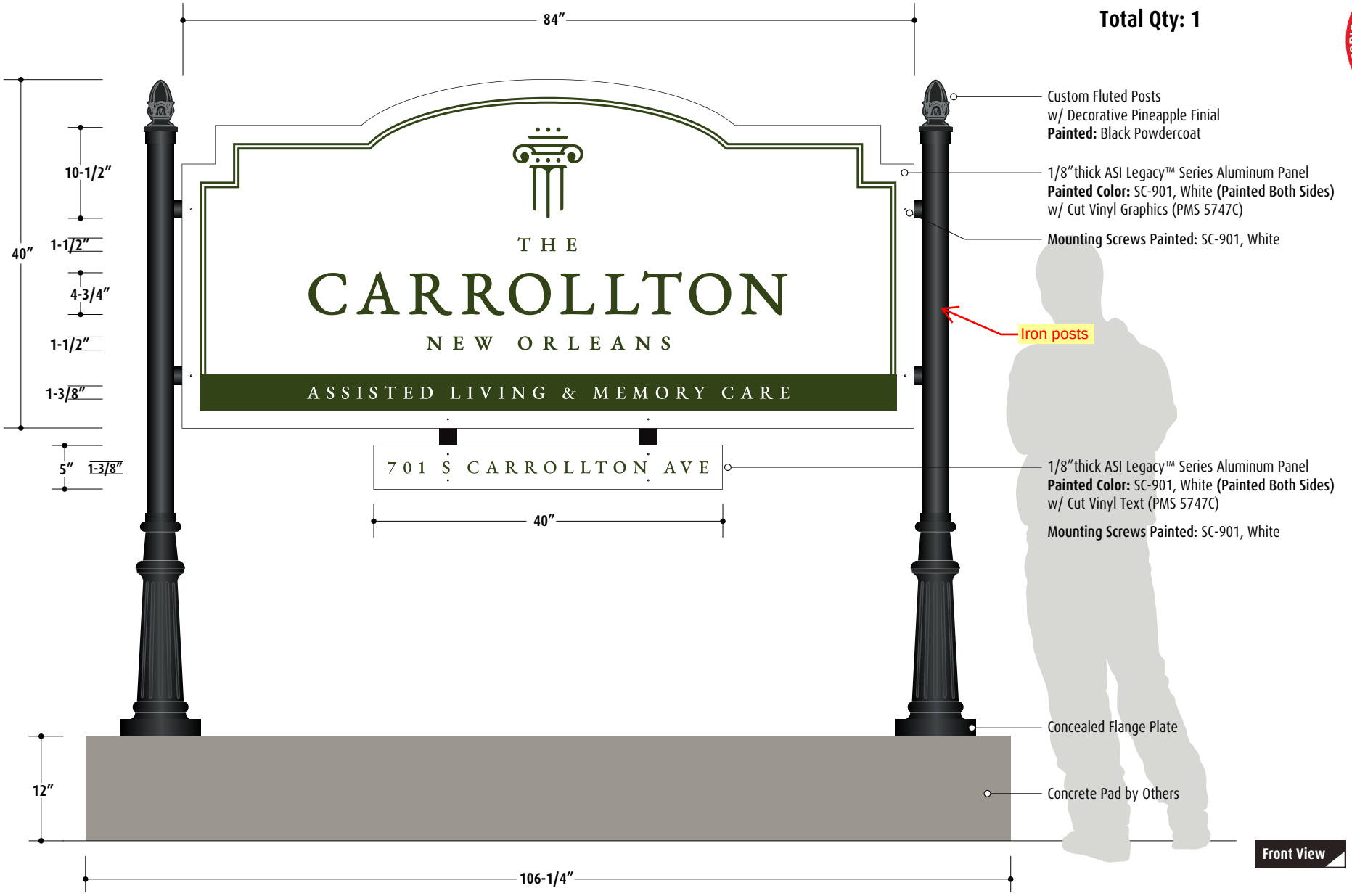

Front View

Client:	Felicity Properties	**PM:**	Lori Hogan			**Approved by:**	**Approval Date:**
Project:	Carrollton Assisted Living & Memory Care	**Scale:**	1/16"=1"	**Org Date:**	10-19-22	**Notes:**	
Order#:	NEWO-9989	**Quote#:**	.	**Drawn by:**	AJB	**Revision1:**	00-00-00

asi Signage Innovations
520 Commerce Point • Harahan, LA 70123
504.704.1000 Tel • 504.704.1006 Fax
www.asisignage.com

This drawing is property of ASI. All Rights for its use and reproduction are reserved by ASI. Client approval of this document is required prior to manufacturing. Your approval acknowledges that this document is correct and supersedes any previous drawings and/or specifications related to this order.
Lead times are based on use of **ASI Standard Colors. If custom colors are selected, additional lead time is needed to submit and review samples. Custom color swatches must be signed off on prior to fabrication. If more than (2) custom colors are requested, an additional fee of **$125 PER COLOR** shall be applied to final invoice.

Sign Type: 14.0 - Monument

Total Qty: 1

HISTORIC DISTRICT LANDMARKS COMMISSION
12-19
wcargile
22
APPROVED

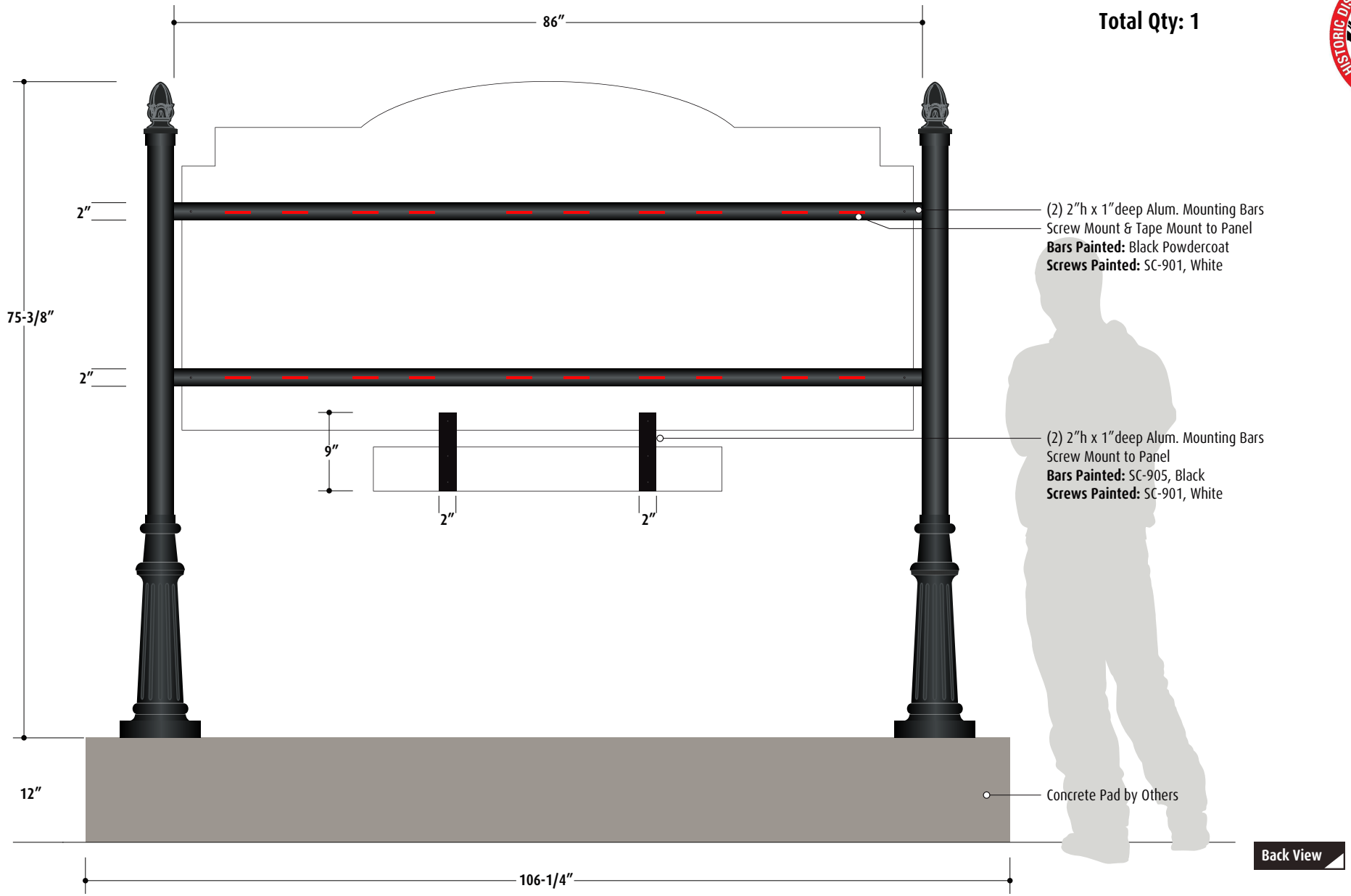

Client:	Felicity Properties	**PM:**	Lori Hogan			**Approved by:**	**Approval Date:**
Project:	Carrollton Assisted Living & Memory Care	**Scale:**	1/16″=1″	**Org Date:**	10-19-22	**Notes:**	
Order#:	NEWO-9989	**Quote#:**	.	**Drawn by:** AJB	**Revision1:** 00-00-00		

asi Signage Innovations
520 Commerce Point • Harahan, LA 70123
504.704.1000 Tel • 504.704.1006 Fax
www.asisignage.com

This drawing is property of ASI. All Rights for its use and reproduction are reserved by ASI. Client approval of this document is required prior to manufacturing. Your approval acknowledges that this document is correct and supersedes any previous drawings and/or specifications related to this order.
Lead times are based on use of **ASI Standard Colors. If custom colors are selected, additional lead time is needed to submit and review samples. Custom color swatches must be signed off on prior to fabrication. If more than (2) custom colors are requested, an additional fee of **$125 PER COLOR** shall be applied to final invoice.

Sign Type:	14.0 - Monument

Total Qty: 1

HISTORIC DISTRICT LANDMARKS COMMISSION
12-19
wcargile
22
APPROVED

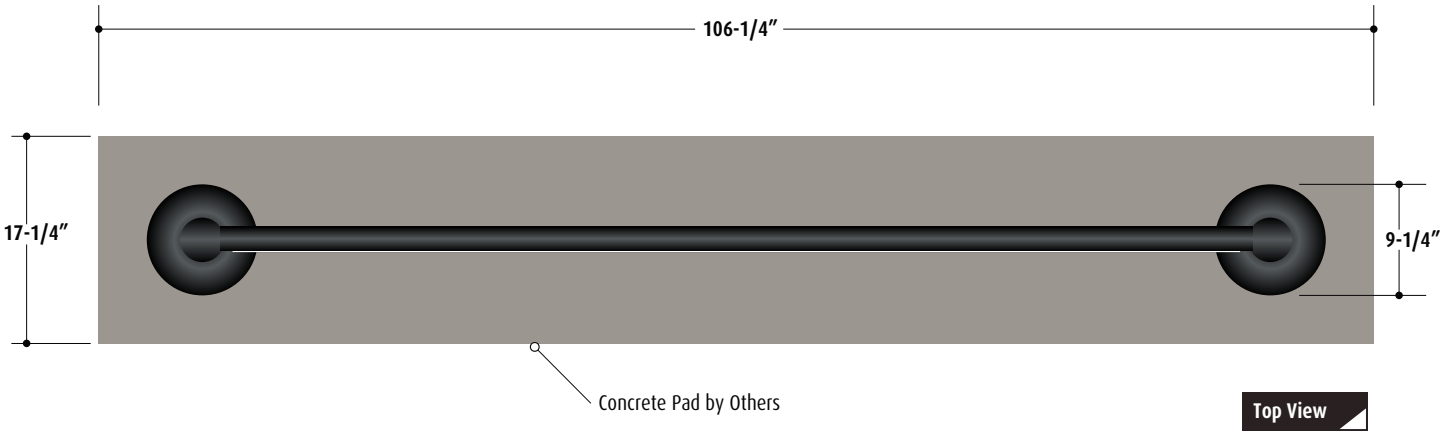

Client:	Felicity Properties	**PM:**	Lori Hogan			**Approved by:**	**Approval Date:**
Project:	Carrollton Assisted Living & Memory Care	**Scale:**	1/16"=1"	**Org Date:**	10-19-22	**Notes:**	
Order#:	NEWO-9989 **Quote#:** .	**Drawn by:**	AJB	**Revision1:**	00-00-00		

asi Signage Innovations
520 Commerce Point • Harahan, LA 70123
504.704.1000 Tel • 504.704.1006 Fax
www.asisignage.com

This drawing is property of ASI. All Rights for its use and reproduction are reserved by ASI. Client approval of this document is required prior to manufacturing. Your approval acknowledges that this document is correct and supersedes any previous drawings and/or specifications related to this order.
Lead times are based on use of **ASI Standard Colors. If custom colors are selected, additional lead time is needed to submit and review samples. Custom color swatches must be signed off on prior to fabrication. If more than (2) custom colors are requested, an additional fee of **$125 PER COLOR** shall be applied to final invoice.