Wohlstadter

Renovation & Addition

3704 Coliseum Street
New Orleans, Lousiana 70115

3704 Coliseum St

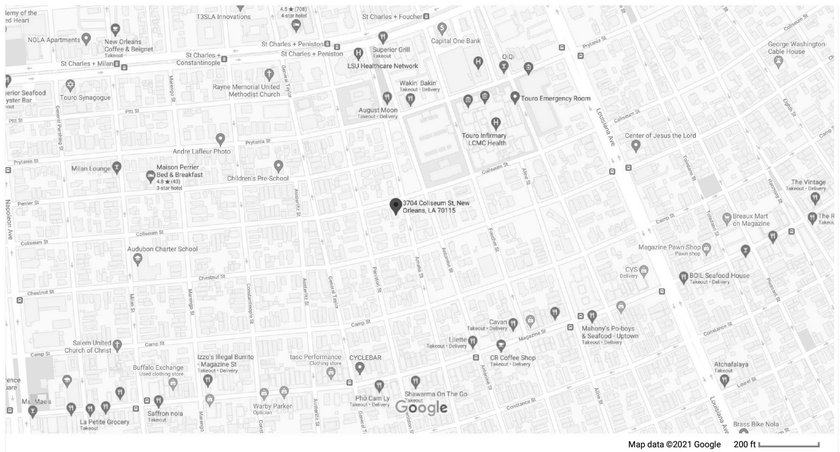

PROJECT INFORMATION

PROJECT LOCATION	3704 COLISEUM STREET NEW ORLEANS, LA 70115	
APPLICABLE CODE	2015 INTERNATIONAL RESIDENTIAL CODE	
PRIMARY OCCUPANCY	SINGLE FAMILY RESIDENTIAL	
SQUARE FOOTAGE	1ST FLOOR (EXISTING)	2790 S.F.
	2ND FLOOR (EXISTING)	1157 S.F.
	2ND FLOOR (NEW)	220 S.F.
	GARAGE (N.I.C.)	478 S.F.
	FRONT PORCH (EXISTING)	321 S.F.
	REAR PORCH (REVISED)	156 S.F.
	BALCONIES (TOTAL)	67 S.F.
PERMEABILITY	TOTAL LOT	9465 S.F.
	LOT COVERAGE	3983 S.F.
	FRONT YARD	1842 S.F.
	IMPERVIOUS AREA	204 S.F.

PROJECT DIRECTORY

PROFESSIONAL OF RECORD	JOHN A. CHRESTIA, AIA CHRESTIA STAUB + BOARD 7219 PERRIER STREET NEW ORLEANS, LOUISIANA 70118 504.866.6677 (p) SETH BOARD (PROJECT MANAGER) sboard@csbarch.com
STRUCTURAL ENGINEER	ROBERT BOUCHON CONSULTING ENGINEER, LLC 1050 S. NORMAN C. FRANCIS PKWY. STE. 314 NEW ORLEANS, LOUISIANA 70125 504.304.2312 (p)
CONTRACTOR	MIKE FRITSCHER FRITSCHER CONSTRUCTION, LLC fritscherconstruction@gmail.com 504.442.1450 (p)

DRAWING LIST

T-100 TITLE SHEET
A-100 SITE PLAN
A-101 AREA PLANS
A-110 1ST FLOOR DEMOLITION PLAN
A-111 1ST FLOOR PROPOSED PLAN
A-120 2ND FLOOR DEMOLITION PLAN
A-121 2ND FLOOR PROPOSED PLAN
A-201 EXTERIOR ELEVATIONS
A-202 EXTERIOR ELEVATIONS
A-301 SECTIONS
A-302 SECTIONS
A-601 DOOR SCHEDULE
A-603 WINDOW SCHEDULE
A-604 FINISH SCHEDULE

E-100 1ST FLOOR LIGHTING PLAN
E-101 2ND FLOOR LIGHTING PLAN
E-102 1ST FLOOR ELECTRICAL PLAN
E-103 2ND FLOOR ELECTRICAL PLAN

S-1 FOUNDATION PLAN
S-2 2ND FLOOR FRAMING PLAN
S-3 ROOF FRAMING PLAN
S-4 FOUNDATION DETAILS

PROJECT NOTES

1. ALL DIMENSIONS ARE TO THE FACE OF STUD OR CENTERLINE OF COLUMN, EXCEPT WHERE OTHERWISE INDICATED. ANY MISSING DIMENSIONS OR MEASUREMENT NEEDING CLARIFICATION SHALL BE PROVIDED BY THE ARCHITECT UPON WRITTEN REQUEST.
2. WORK ONLY FROM THE WRITTEN DIMENSION SHOWN. DO NOT SCALE DRAWINGS. WORK FROM ESTABLISHED LINES AND LEVELS. ESTABLISH DEPENDABLE MARKERS FOR LINES AND LEVELS OF THE WORK.
3. THE CONTRACTOR SHALL OBTAIN ALL NECESSARY PERMITS AND INSPECTIONS FOR THIS WORK. ALL TRADES SHALL BE RESPONSIBLE FOR PERFORMING WORK IN ACCORDANCE WITH ALL APPLICABLE CODES, LAWS, AND REGULATIONS.
4. ALL CONSTRUCTION SHALL COMPLY WITH ALL LOCAL, STATE AND FEDERAL CODES, REGULATIONS AND ORDINANCES.
5. ALL WORK SHALL BE DONE IN A WORKMAN LIKE MANNER IN ACCORDANCE WITH ALL INDUSTRY STANDARDS AND ALL MANUFACTURERS RECOMENDATIONS.
6. ALL WORK SHALL BE GUARANTEED FOR ONE YEAR FROM SUBSTANTIAL COMPLETION.
7. CONTRACTOR TO PROVIDE TERMITE PROTECTION AS REQUIRED BY R318 IRC 2015 ED.
8. ALL HANDRAILS AND GUARDRAILS TO BE DESIGNED TO COMPLY WITH R311.7.8 IRC 2015 ED.
9. INSULATION TO BE R-13 OR GREATER IN WALLS AND ATTIC SPACES TO HAVE SPRAY FOAM INSULATION WITH R-30 EQUIVALANCY OR GREATER AS PER SECTION N1102 IRC 2015 ED.
10. PROVIDE AT LEAST ONE (1) GAS POWERED, LARGE CAPACITY TANK TYPE WATER HEATER PER FLOOR. CONFIRM NUMBER OF HEATERS FOR DEMAND WITH PLUMBER. PLUMBER TO CONFIRM NEED FOR RECIRCULATION PUMP.
11. REFER TO STRUCTURAL DRAWINGS (BY OTHERS) FOR FOUNDATION & FRAMING INFORMATION, AND SIZE NUMBER AND TYPE OF BEAMS. STRUCTURAL DRAWINGS AND SPECIFICATIONS SHALL SUPERCEDE ANY INFORMATION INCLUDED IN THE ARCHITECTURAL DRAWINGS AND SPECIFICATIONS. BRING ANY DISCREPANCIES TO THE ATTENTION OF THE ARCHITECT.
12. THESE DRAWINGS HAVE BEEN CHECKED TO ACHIEVE A REASONABLE AND ACCEPTABLE DEGREE OF ACCURACY. HOWEVER, THE CONTRACTOR SHALL BE RESPONSIBLE FOR VERIFYING ALL EXISTING SITE CONDITIONS, DIMENSIONS, DETAILS, AND REQUIREMENTS OF THESE PLANS AND SPECIFICATIONS PRIOR TO THE START OF WORK.
13. THE ARCHITECT RESERVES ALL RIGHTS TO THIS DESIGN, AND IT MAY ONLY BE USED AT THE ADDRESS INDICATED ON THESE PLANS AND SPECIFICATIONS. ANY OTHER USE OF THESE PLANS AND SPECIFICATIONS, EXCEPT BY EXPRESSED WRITTEN PERMISSION BY THE ARCHITECT IS PROHIBITED.
14. ADDITIONAL LANDSCAPING AND HARDSCAPING WORK NOT INDICATED ON DRAWINGS SHALL BE HANDLED UNDER SEPARATE CONTRACT BY OWNER.
15. ANY SUGGESTED SUBSTITUTIONS SHOULD BE SUBMITTED TO THE ARCHITECT FOR APPROVAL AND PROVIDED AS AN ALTERNATE PRICE TO REPLACE THE ORIGINALLY INTENDED MATERIAL OR EQUIPMENT.

Permit Set

Proj. No. 2013

CHRESTIA
STAUB ARCHITECTURE INTERIORS DESIGN
+BOARD

7219 PERRIER STREET + NEW ORLEANS, LA

11/09/2021

THESE DRAWINGS CONTAIN PROPRIETARY AND CONFIDENTIAL INFORMATION THAT IS THE INTELLECTUALPROPERTY OF CHRESTIA & STAUB. REPRODUCTION AND USE OF THESE DOCUMENTS OR THE UNDERLYING DESIGN CONCEPTS CONTAINED THEREIN WITHOUT THE PRIOR AND WRITTEN PERMISSION OF CHRESTIA & STAUB IS PROHIBITED.

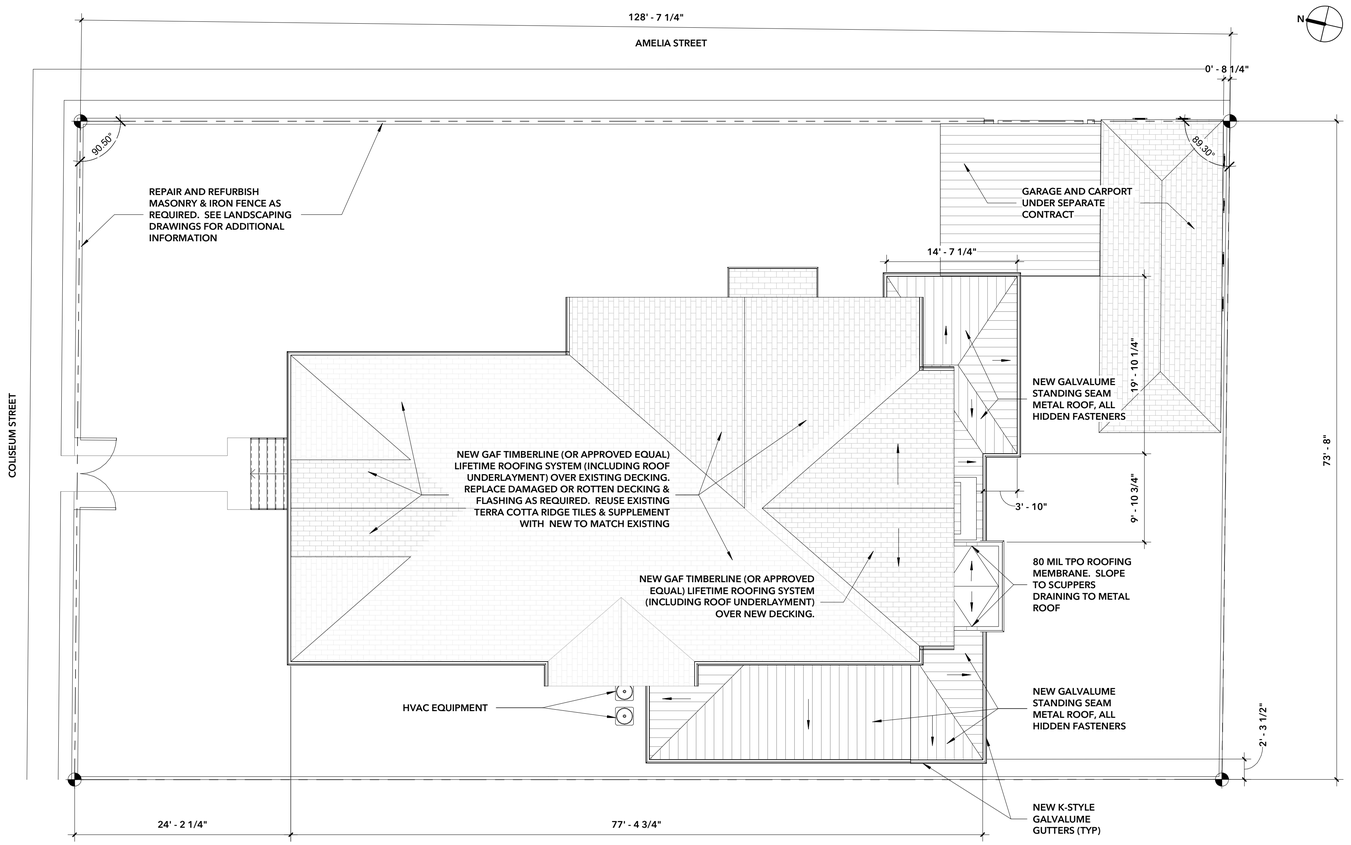

1 Site Plan
A 100 1/8" = 1'-0"

These plans and specifications have been prepared by or under our close personal supervision and, to the best of our knowledge and belief, they comply with all city requirements, and that I am ~~supervising~~ **(not supervising)** the work.

Architect _____

License No. **1876**

CHRESTIA STAUB ARCHITECTURE INTERIORS DESIGN +BOARD
7219 PERRIER STREET + NEW ORLEANS, LA

JOHN A. CHRESTIA No. 1876 REGISTERED STATE OF LOUISIANA REGISTERED ARCHITECT

these drawings contain proprietary and confidential information that is the intellectual property of chrestia & staub. reproduction and use of these documents or the underlying design concepts contained therein without the prior and written permission of chrestia & staub is prohibited

Wohlstadter

Renovation & Addition

3704 Coliseum Street
New Orleans, Louisiana 70115

MARK	DATE	DESCRIPTION

SHEET ISSUED: 11/09/2021

PROJECT NO.: Proj. No. 2013

© 2016 BY: CHRESTIA & STAUB

SHEET TITLE: Site Plan

SHEET NUMBER: A 100

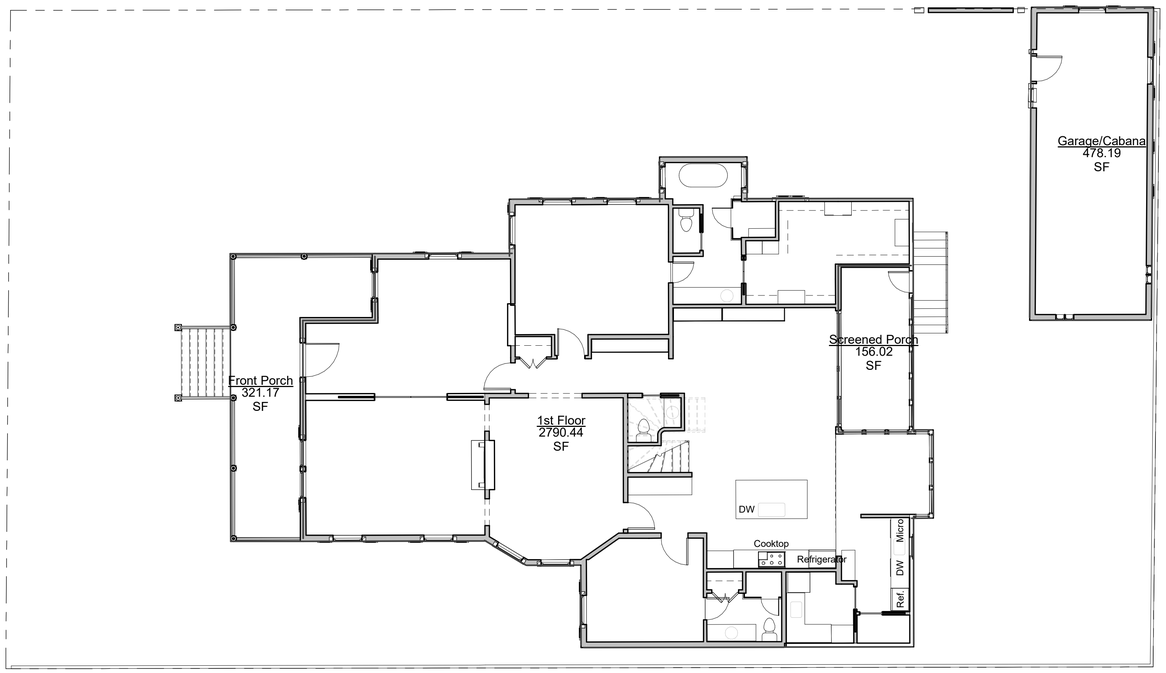

1 1st Floor Area Plan
A 101 1/8" = 1'-0"

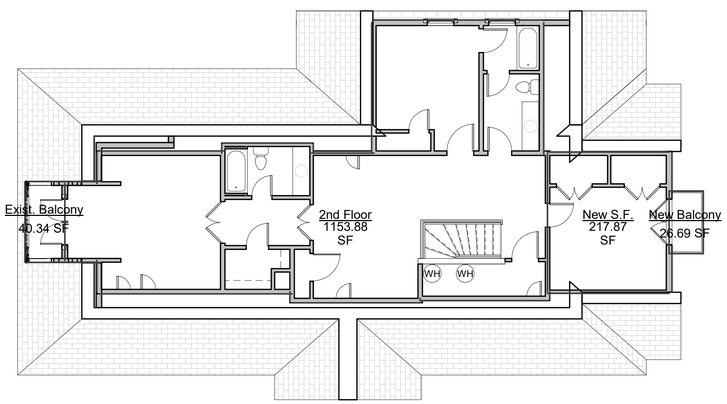

2 2nd Floor Area Plan
A 101 1/8" = 1'-0"

These plans and specifications have been prepared by or under our close personal supervision and, to the best of our knowledge and belief, they comply with all city requirements, and that I am ~~supervising~~ **(not supervising)** the work.

Architect _____

License No. **1876**

CHRESTIA STAUB ARCHITECTURE INTERIORS DESIGN
7219 PERRIER STREET + NEW ORLEANS, LA

JOHN A. CHRESTIA No. 18876 REGISTERED STATE OF LOUISIANA REGISTERED ARCHITECT

these drawings contain proprietary and confidential information that is the intellectual property of chrestia & staub. reproduction and use of these documents or the underlying design concepts contained therein without the prior and written permission of chrestia & staub is prohibited

Wohlstadter

Renovation & Addition

3704 Coliseum Street
New Orleans, Lousiana 70115

MARK	DATE	DESCRIPTION

SHEET ISSUED: 11/09/2021

PROJECT NO.: Proj. No. 2013

© 2016 BY: CHRESTIA & STAUB

SHEET TITLE:
Area Plans

SHEET NUMBER:
A 101

HDLC Exterior Wall Demolition Calculations (1st Floor):
Total Exterior Wall Perimeter = 229.063 FT
Total Exterior Wall Perimeter Demolished = 70.917 FT = **31.0%**

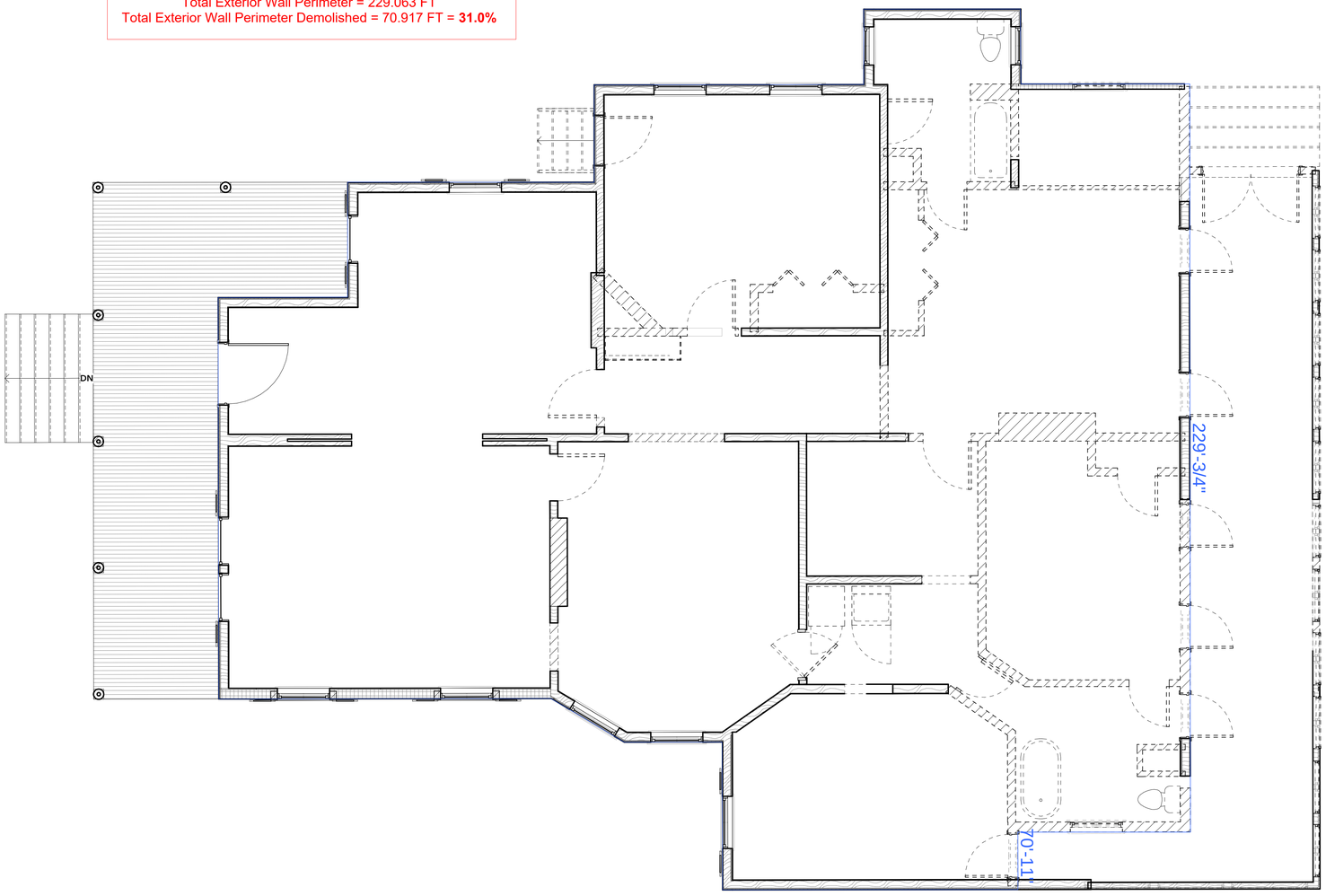

1 First Floor Demoltion
A 110 1/4" = 1'-0"

Demolition Notes

1. REMOVE ALL EXISTING ABANDONED DUCTWORK, PIPES, AND MECHANICAL EQUIPEMENT FROM ATTIC SPACES AND UNDERNEATH HOUSE
2. REMOVE ANY GALVANIZED PIPING AND REPLACE WITH CODE COMPLIANT PIPING MATERIAL AS REQUIRED
3. REMOVE ANY ALUMINUM AND/OR KNOB & TUBE WIRING AND REPLACE WITH COPPER WIRING AS REQUIRED
4. REMOVE ANY DEBRIS FROM UNDERNEATH HOUSE AND MAKE SURE CRAWL SPACE IS CLEAR AND LEVEL
5. REMOVE ALL EXISTING ABANDONED WIRING, INCLUDING OLD KNOB & TUBE, LIGHTING, RECEPTACLES, AND ANY OTHER ELECTRICAL DEVICES RELATED TO OLD SECURITY ALARMS, INTERCOMS ETC.
6. CAREFULLY REMOVE AND SALVAGE ALL EXISTING (ORIGINAL) DOORS, TRANSOMS, DOOR HARDWARE AND ANY SALVAGABLE MOULDINGS FOR REUSE.
7. REMOVE ALL DAMAGED AND/OR ROTTEN WOOD (FLOOR BOARDS, WEATHER BOARDS, MOULDINGS, ETC.) AND REPLACE WITH NEW MATERIAL TO MATCH EXISTING
8. REPAIR AND/OR REPLACE ROTTEN OR DAMAGED MATERIAL ON EXISTING WINDOWS TO REMAIN AND ENSURE PROPER WORKING ORDER
9. EXISTING STAIR TO REMAIN. PROTECT ALL RAILING, TREAD & MOULDING COMPONENTS FROM CONSTRUCTION DAMAGE
10. PROTECT ALL EXISTING CEILING MEDALLIONS FROM NEW CONSTRUCTION. HAVE CASTINGS MADE PRIOR TO COMMENCEMENT OF CONSTRUCTION TO PRESERVE DETAIL FOR REPAIR IN EVENT OF ACCIDENTAL DAMAGE
11. WHERE NECESSARY DUE TO CONSTRUCTION, CAREFULLY REMOVE AND SALVAGE ALL EXISTING WOOD PANELING (2ND FLOOR) FOR POTENTIAL REUSE
12. SUPPORT AND STABILIZE AREA AROUND CORNER FIREPLACE AND CHIMNEY TO BE REMOVED (1ST FLOOR). REMOVE FROM TOP DOWN AND SUPPORT ADJACENT FOUNDATION. PATCH ROOF AS REQUIRED
13. REFER TO SHORING CONTRACTOR FOR SPECIFICATIONS ON STRUCTURAL AND FOUNDATION MATERIALS TO BE REMOVED AND REPLACED FOR STRUCTURAL STABILITY
14. REFER TO LANDSCAPING DRAWINGS FOR DEMOLITION OF EXTERIOR LANDSCAPING AND HARDSCAPING FOR PROPOSED LANDSCAPING IMPROVEMENTS

These plans and specifications have been prepared by or under our close personal supervision and, to the best of our knowledge and belief, they comply with all city requirements, and that I am ~~supervising~~ **(not supervising)** the work.

Architect _____

License No. **1876**

CHRESTIA STAUB ARCHITECTURE INTERIORS DESIGN + BOARD
7219 PERRIER STREET + NEW ORLEANS, LA

JOHN A. CHRESTIA No. 1876 REGISTERED STATE OF LOUISIANA REGISTERED ARCHITECT

these drawings contain proprietary and confidential information that is the intellectual property of chrestia & staub. reproduction and use of these documents or the underlying design concepts contained therein without the prior and written permission of chrestia & staub is prohibited

Wohlstadter
Renovation & Addition
3704 Coliseum Street
New Orleans, Louisiana 70115

MARK	DATE	DESCRIPTION

SHEET ISSUED: 11/09/2021
PROJECT NO.: Proj. No. 2013
© 2016 BY: CHRESTIA & STAUB
SHEET TITLE: 1st Floor Demoltion Plan
SHEET NUMBER: A 110

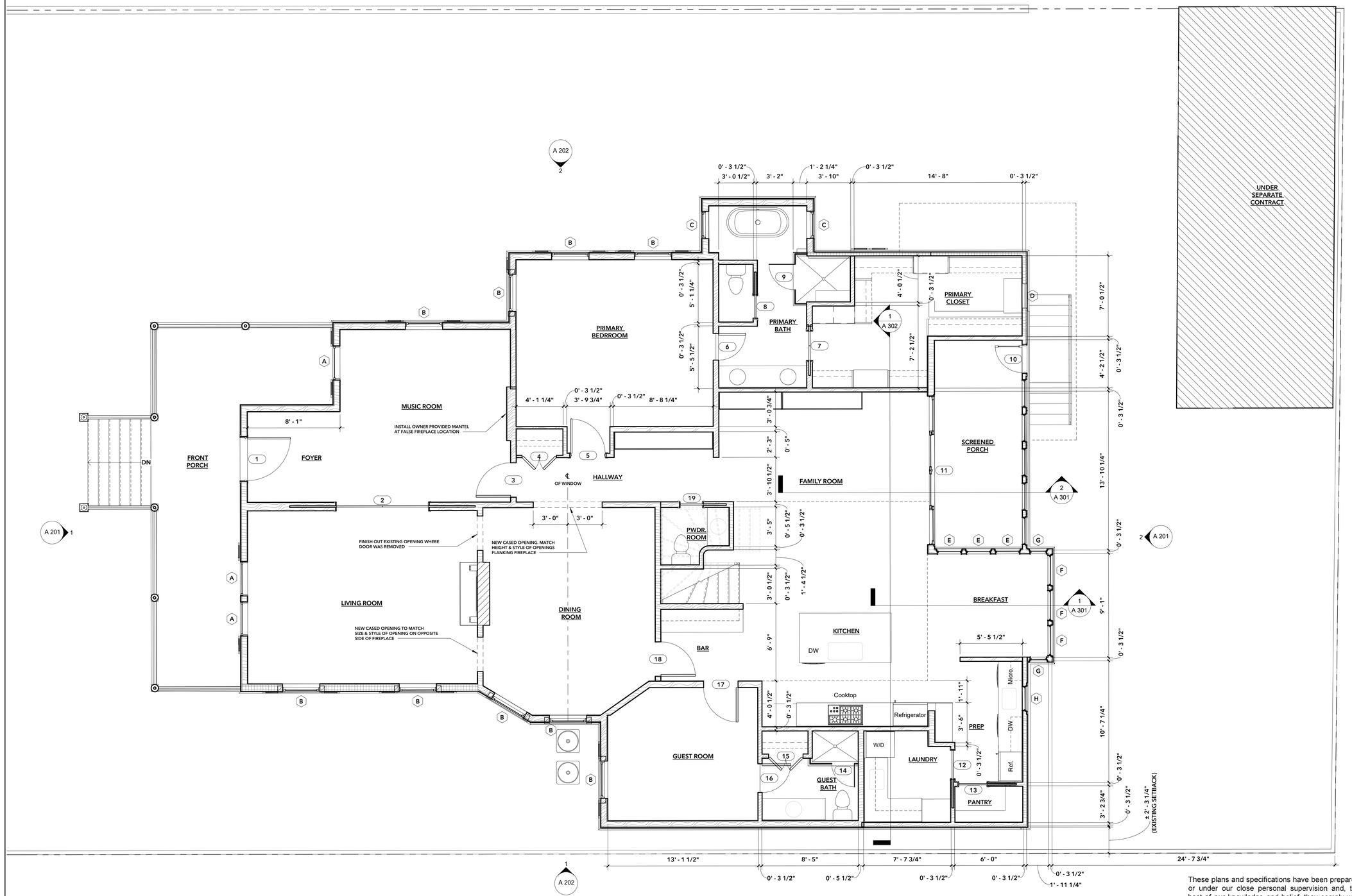

1 First Floor
A 111 1/4" = 1'-0"

These plans and specifications have been prepared by or under our close personal supervision and, to the best of our knowledge and belief, they comply with all city requirements, and that I am ~~supervising~~ (not supervising) the work.

Architect _____

License No. 1876

CHRESTIA STAUB ARCHITECTURE INTERIORS DESIGN +BOARD

7219 PERRIER STREET + NEW ORLEANS, LA

JOHN A. CHRESTIA No. 1876 REGISTERED STATE OF LOUISIANA REGISTERED ARCHITECT

these drawings contain proprietary and confidential information that is the intellectual property of chrestia & staub. reproduction and use of these documents or the underlying design concepts contained therein without the prior and written permission of chrestia & staub is prohibited

Wohlstadter

Renovation & Addition

3704 Coliseum Street
New Orleans, Louisiana 70115

MARK	DATE	DESCRIPTION

SHEET ISSUED: 11/09/2021

PROJECT NO.: Proj. No. 2013

© 2016 BY: CHRESTIA & STAUB

SHEET TITLE:
Proposed 1st Floor Plan

SHEET NUMBER:
A 111

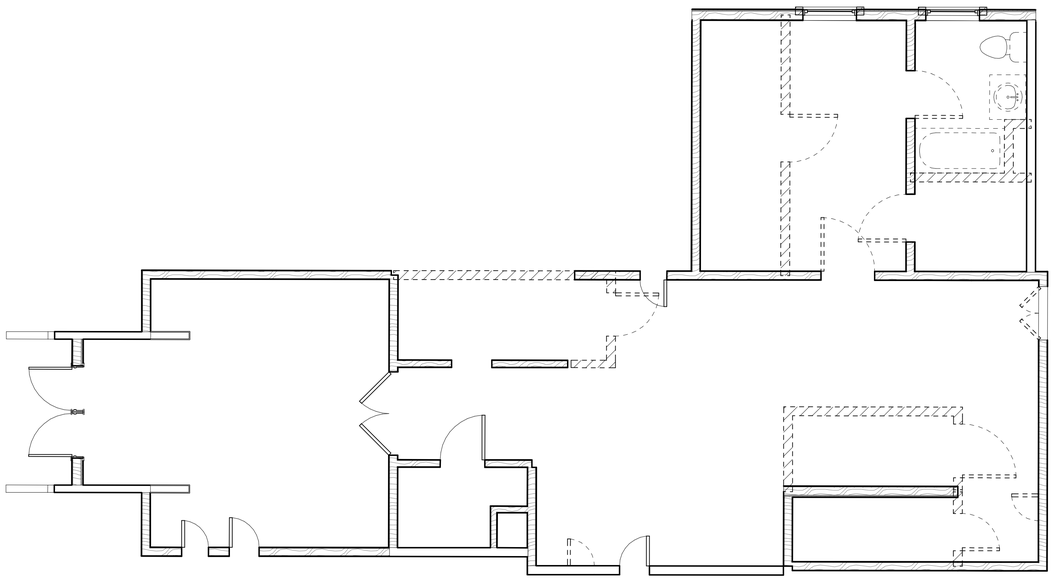

1 2nd Floor Demolition
A 120 1/4" = 1'-0"

Demolition Notes

1. REMOVE ALL EXISTING ABANDONED DUCTWORK, PIPES, AND MECHANICAL EQUIPEMENT FROM ATTIC SPACES AND UNDERNEATH HOUSE
2. REMOVE ANY GALVANIZED PIPING AND REPLACE WITH CODE COMPLIANT PIPING MATERIAL AS REQUIRED
3. REMOVE ANY ALUMINUM AND/OR KNOB & TUBE WIRING AND REPLACE WITH COPPER WIRING AS REQUIRED
4. REMOVE ANY DEBRIS FROM UNDERNEATH HOUSE AND MAKE SURE CRAWL SPACE IS CLEAR AND LEVEL
5. REMOVE ALL EXISTING ABANDONED WIRING, INCLUDING OLD KNOB & TUBE, LIGHTING, RECEPTACLES, AND ANY OTHER ELECTRICAL DEVICES RELATED TO OLD SECURITY ALARMS, INTERCOMS ETC.
6. CAREFULLY REMOVE AND SALVAGE ALL EXISTING (ORIGINAL) DOORS, TRANSOMS, DOOR HARDWARE AND ANY SALVAGABLE MOULDINGS FOR REUSE.
7. REMOVE ALL DAMAGED AND/OR ROTTEN WOOD (FLOOR BOARDS, WEATHER BOARDS, MOULDINGS, ETC.) AND REPLACE WITH NEW MATERIAL TO MATCH EXISTING
8. REPAIR AND/OR REPLACE ROTTEN OR DAMAGED MATERIAL ON EXISTING WINDOWS TO REMAIN AND ENSURE PROPER WORKING ORDER
9. EXISTING STAIR TO REMAIN. PROTECT ALL RAILING, TREAD & MOULDING COMPONENTS FROM CONSTRUCTION DAMAGE
10. PROTECT ALL EXISTING CEILING MEDALLIONS FROM NEW CONSTRUCTION. HAVE CASTINGS MADE PRIOR TO COMMENCEMENT OF CONSTRUCTION TO PRESERVE DETAIL FOR REPAIR IN EVENT OF ACCIDENTAL DAMAGE
11. WHERE NECESSARY DUE TO CONSTRUCTION, CAREFULLY REMOVE AND SALVAGE ALL EXISTING WOOD PANELING (2ND FLOOR) FOR POTENTIAL REUSE
12. SUPPORT AND STABILIZE AREA AROUND CORNER FIREPLACE AND CHIMNEY TO BE REMOVED (1ST FLOOR). REMOVE FROM TOP DOWN AND SUPPORT ADJACENT FOUNDATION. PATCH ROOF AS REQUIRED
13. REFER TO SHORING CONTRACTOR FOR SPECIFICATIONS ON STRUCTURAL AND FOUNDATION MATERIALS TO BE REMOVED AND REPLACED FOR STRUCTURAL STABILITY
14. REFER TO LANDSCAPING DRAWINGS FOR DEMOLITION OF EXTERIOR LANDSCAPING AND HARDSCAPING FOR PROPOSED LANDSCAPING IMPROVEMENTS

These plans and specifications have been prepared by or under our close personal supervision and, to the best of our knowledge and belief, they comply with all city requirements. And that I am ~~supervising~~ **(not supervising)** the work.

Architect _____

License No. **1876**

CHRESTIA STAUB ARCHITECTURE INTERIORS DESIGN +BOARD
7219 PERRIER STREET + NEW ORLEANS, LA

JOHN A. CHRESTIA No. 1876 REGISTERED STATE OF LOUISIANA REGISTERED ARCHITECT

these drawings contain proprietary and confidential information that is the intellectual property of chrestia & staub. reproduction and use of these documents or the underlying design concepts contained therein without the prior and written permission of chrestia & staub is prohibited

Wohlstadter
Renovation & Addition
3704 Coliseum Street
New Orleans, Louisiana 70115

MARK	DATE	DESCRIPTION

SHEET ISSUED: 11/09/2021

PROJECT NO.: Proj. No. 2013

© 2016 BY:
CHRESTIA & STAUB

SHEET TITLE:
2nd Floor
Demolition Plan

SHEET NUMBER:
A 120

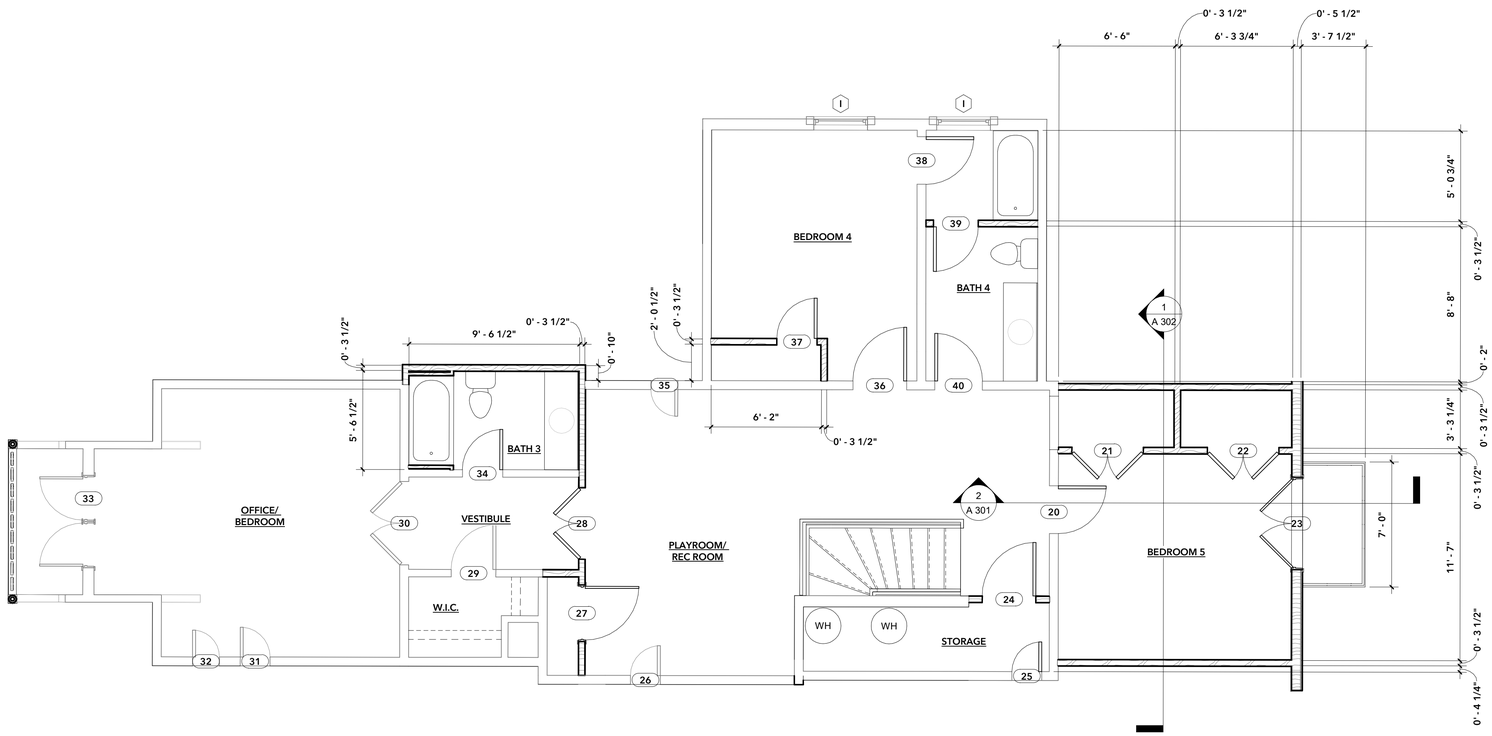

1 2nd Floor
A 121 1/4" = 1'-0"

These plans and specifications have been prepared by or under our close personal supervision and, to the best of our knowledge and belief, they comply with all city requirements, and that I am ~~supervising~~ (not supervising) the work.

Architect _____

License No. 1876

CHRESTIA STAUB ARCHITECTURE INTERIORS DESIGN + BOARD

7219 PERRIER STREET + NEW ORLEANS, LA

JOHN A. CHRESTIA No. 18876 REGISTERED STATE OF LOUISIANA REGISTERED ARCHITECT

these drawings contain proprietary and confidential information that is the intellectual property of chrestia & staub. reproduction and use of these documents or the underlying design concepts contained therein without the prior and written permission of chrestia & staub is prohibited

Wohlstadter

Renovation & Addition

3704 Coliseum Street
New Orleans, Louisiana 70115

MARK	DATE	DESCRIPTION

SHEET ISSUED: 11/09/2021

PROJECT NO.: Proj. No. 2013

© 2016 BY: CHRESTIA & STAUB

SHEET TITLE:
Proposed 2nd Floor Plan

SHEET NUMBER:
A 121

1 A 201 North - Coliseum St.
1/4" = 1'-0"

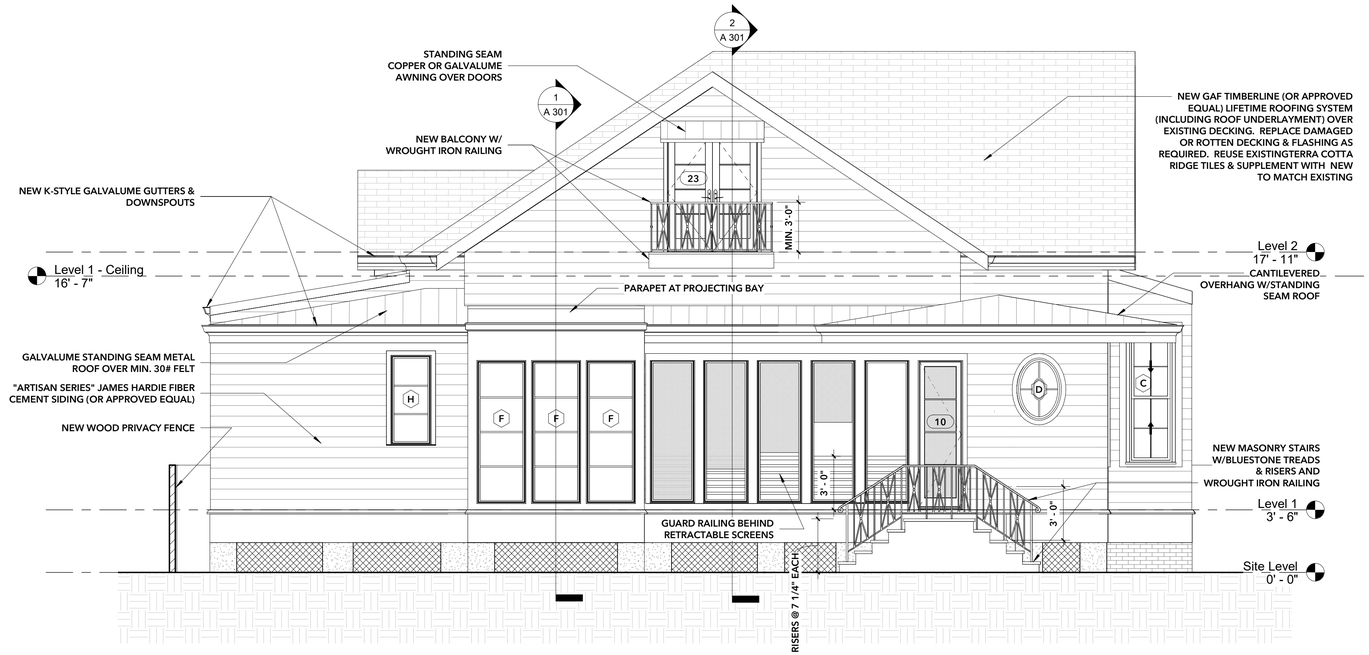

2 A 201 Rear Elevation
1/4" = 1'-0"

These plans and specifications have been prepared by or under our close personal supervision and, to the best of our knowledge and belief, they comply with all city requirements, and that I am ~~supervising~~ (not supervising) the work.

Architect _____

License No. 1876

CHRESTIA STAUB ARCHITECTURE INTERIORS DESIGN +BOARD
7219 PERRIER STREET + NEW ORLEANS, LA

JOHN A. CHRESTIA No. 18876 REGISTERED STATE OF LOUISIANA REGISTERED ARCHITECT

these drawings contain proprietary and confidential information that is the intellectual property of chrestia & staub. reproduction and use of these documents or the underlying design concepts contained therein without the prior and written permission of chrestia & staub is prohibited

Wohlstadter
Renovation & Addition
3704 Coliseum Street
New Orleans, Louisiana 70115

MARK	DATE	DESCRIPTION

SHEET ISSUED: 11/09/2021

PROJECT NO.: Proj. No. 2013

© 2016 BY: CHRESTIA & STAUB

SHEET TITLE: Exterior Elevations

SHEET NUMBER: A 201

1 East - Side
A 202 1/4" = 1'-0"

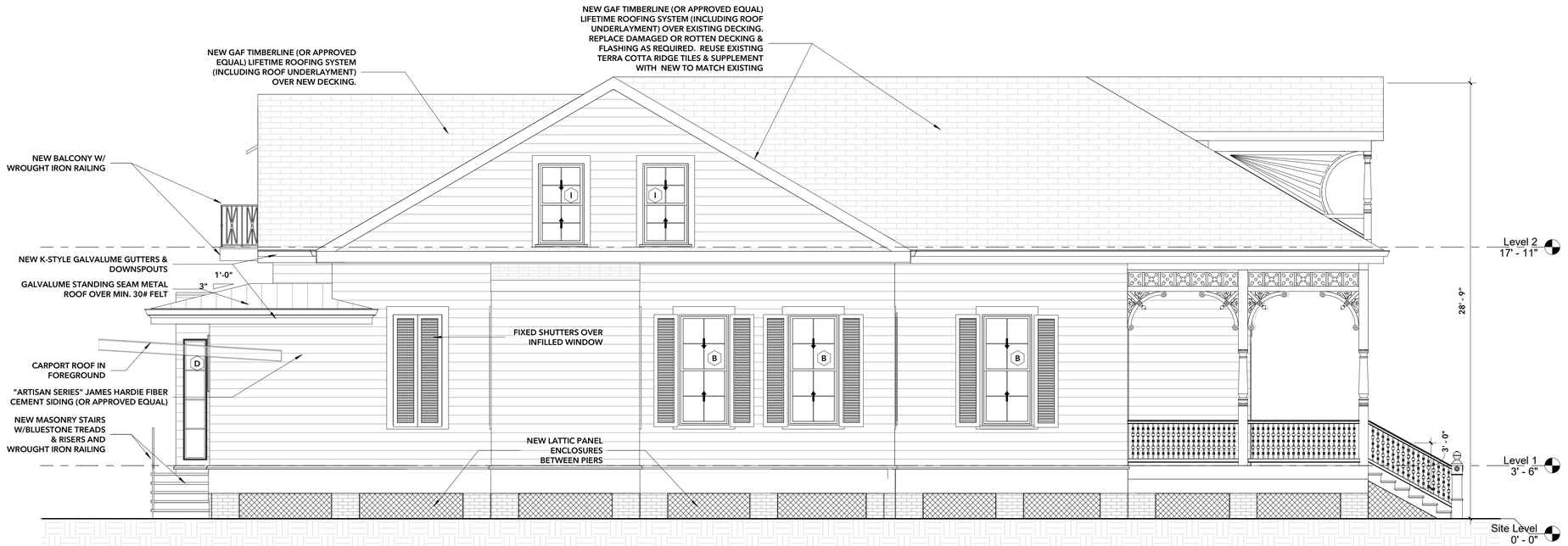

2 West - Amelia St.
A 202 1/4" = 1'-0"

These plans and specifications have been prepared by or under our close personal supervision and, to the best of our knowledge and belief, they comply with all city requirements, and that I am ~~supervising~~ (not supervising) the work.

Architect _____

License No. 1876

CHRESTIA STAUB ARCHITECTURE INTERIORS DESIGN +BOARD
7219 PERRIER STREET + NEW ORLEANS, LA

JOHN A. CHRESTIA No. 1876 REGISTERED STATE OF LOUISIANA REGISTERED ARCHITECT

these drawings contain proprietary and confidential information that is the intellectual property of chrestia & staub. reproduction and use of these documents or the underlying design concepts contained therein without the prior and written permission of chrestia & staub is prohibited

Wohlstadter
Renovation & Addition
3704 Coliseum Street
New Orleans, Lousiana 70115

MARK	DATE	DESCRIPTION

SHEET ISSUED: 11/09/2021

PROJECT NO.: Proj. No. 2013

© 2016 BY: CHRESTIA & STAUB

SHEET TITLE:
Exterior Elevations

SHEET NUMBER:
A 202

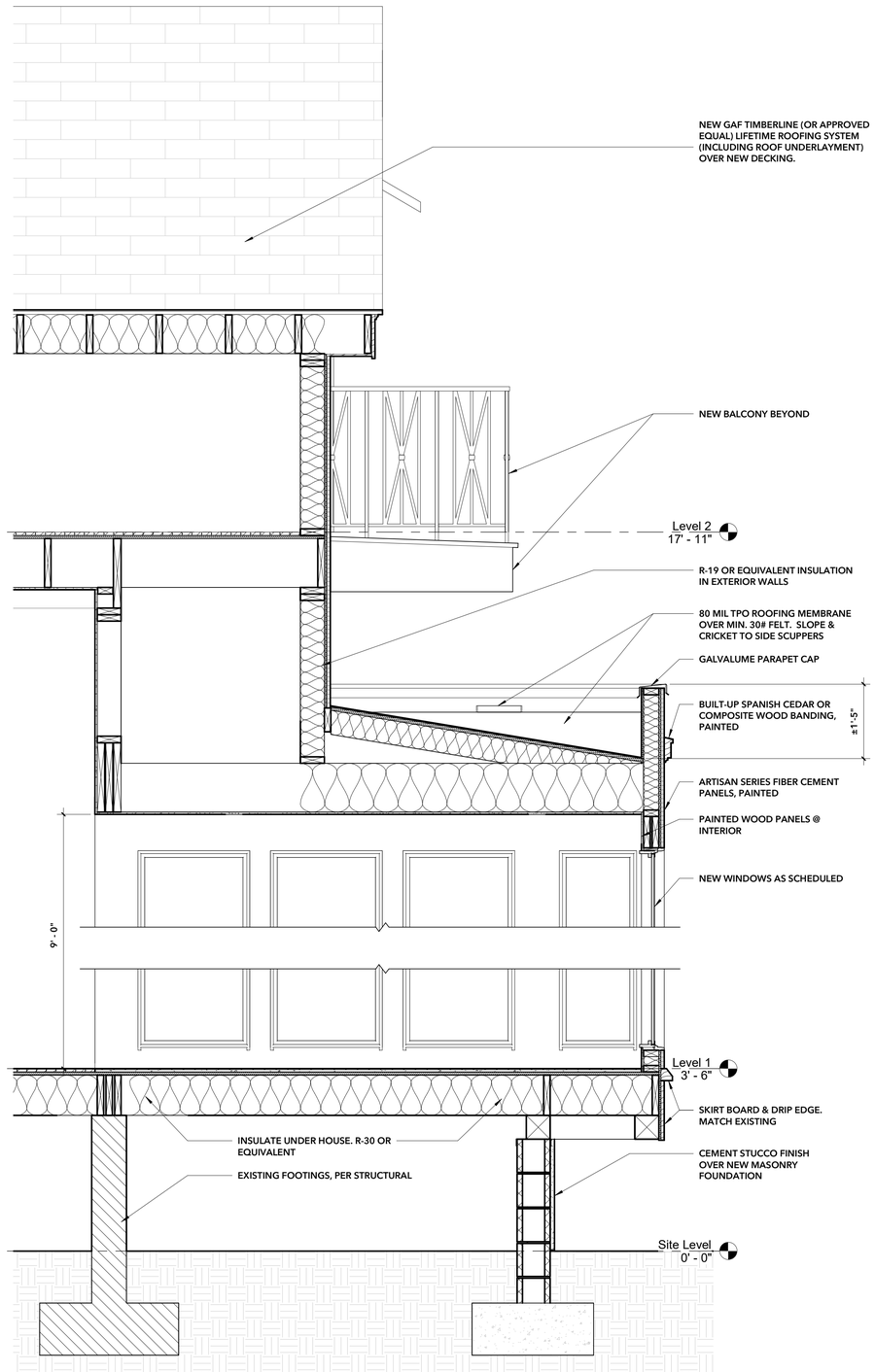

1 Section Through Breakfast
A 301 3/4" = 1'-0"

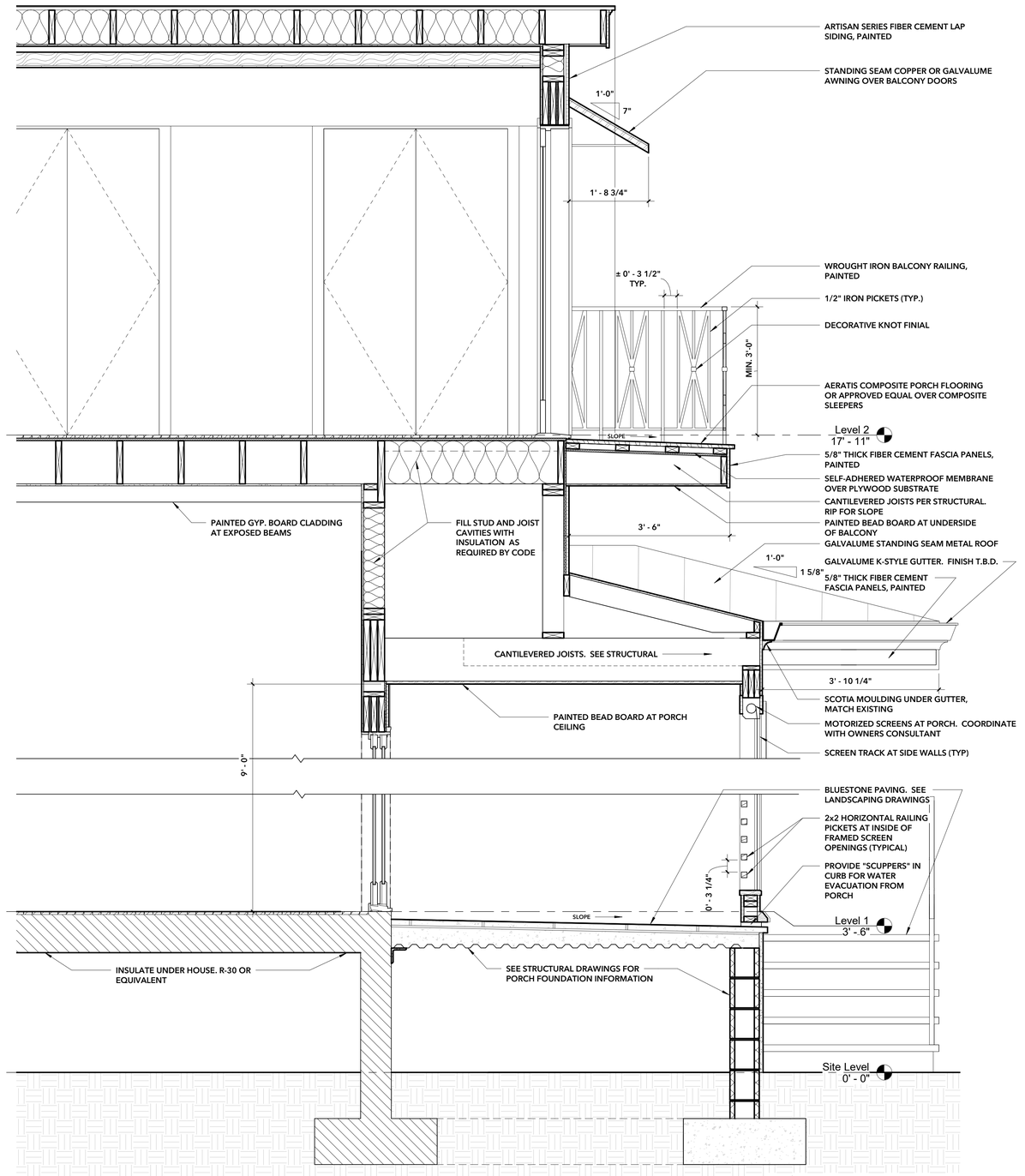

2 Section Through Screened Porch
A 301 3/4" = 1'-0"

These plans and specifications have been prepared by or under our close personal supervision and, to the best of our knowledge and belief, they comply with all city requirements, and that I am ~~supervising~~ (not supervising) the work.

Architect

License No. 1876

CHRESTIA STAUB ARCHITECTURE INTERIORS DESIGN +BOARD
7219 PERRIER STREET + NEW ORLEANS, LA

JOHN A. CHRESTIA No. 1876 REGISTERED STATE OF LOUISIANA ARCHITECT

these drawings contain proprietary and confidential information that is the intellectual property of chrestia & staub. reproduction and use of these documents or the underlying design concepts contained therein without the prior and written permission of chrestia & staub is prohibited

Wohlstadter
Renovation & Addition
3704 Coliseum Street
New Orleans, Louisiana 70115

MARK	DATE	DESCRIPTION

SHEET ISSUED: 11/09/2021

PROJECT NO.: Proj. No. 2013

© 2016 BY: CHRESTIA & STAUB

SHEET TITLE: Sections

SHEET NUMBER: A 301

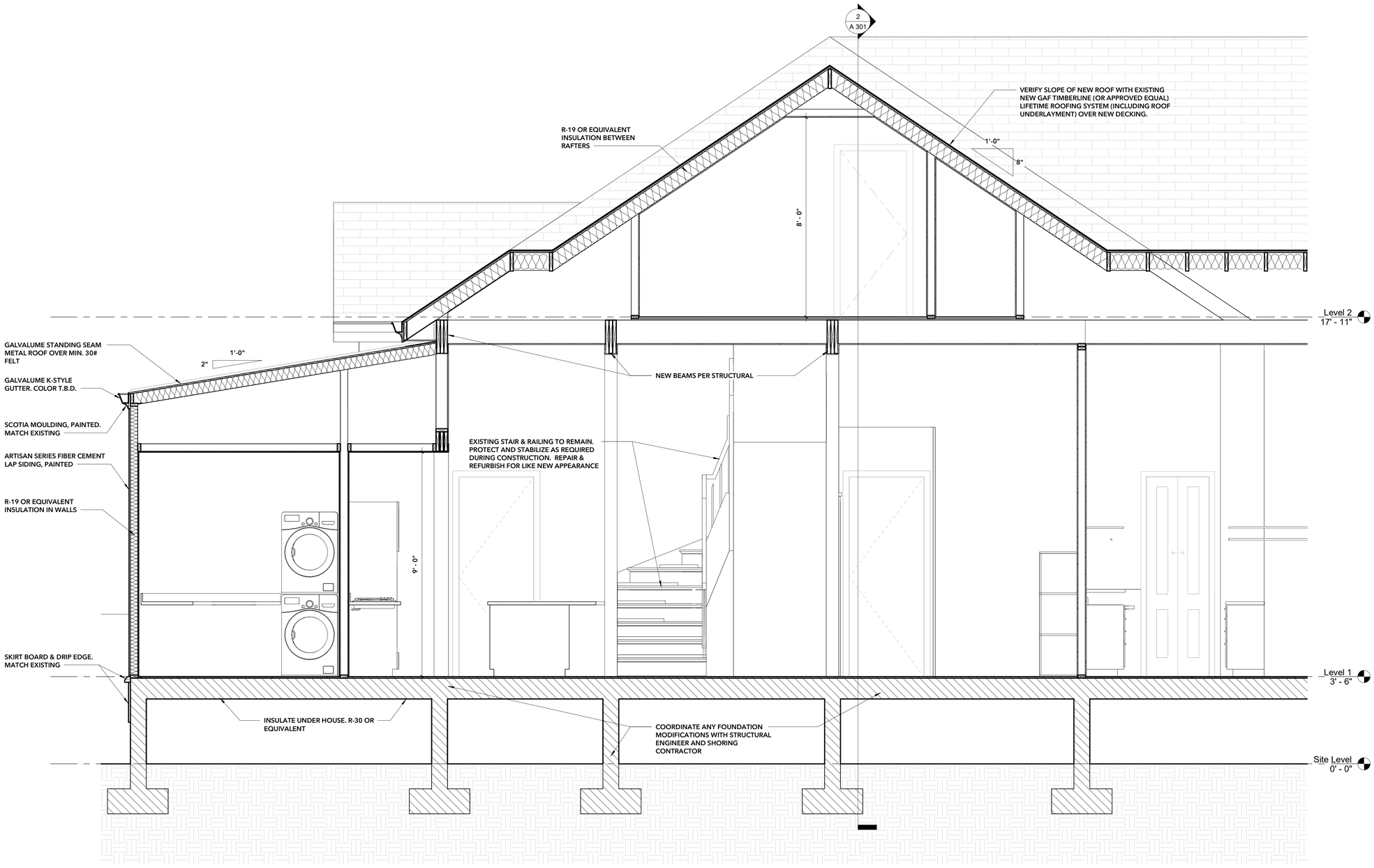

1 Cross Section
A 302 1/2" = 1'-0"

These plans and specifications have been prepared by or under our close personal supervision and, to the best of our knowledge and belief, they comply with all city requirements, and that I am ~~supervising~~ (not supervising) the work.

Architect _____

License No. 1876

CHRESTIA STAUB ARCHITECTURE INTERIORS DESIGN +BOARD
7219 PERRIER STREET + NEW ORLEANS, LA

JOHN A. CHRESTIA No. 18876 REGISTERED STATE OF LOUISIANA REGISTERED ARCHITECT

these drawings contain proprietary and confidential information that is the intellectual property of chrestia & staub. reproduction and use of these documents or the underlying design concepts contained therein without the prior and written permission of chrestia & staub is prohibited

Wohlstadter
Renovation & Addition
3704 Coliseum Street
New Orleans, Louisiana 70115

MARK	DATE	DESCRIPTION

SHEET ISSUED: 11/09/2021

PROJECT NO.: Proj. No. 2013

© 2016 BY: CHRESTIA & STAUB

SHEET TITLE: Sections

SHEET NUMBER: A 302

Door Schedule

Mark	Type	Width	Height	Material	Frame	Hardware Type	Comments
1	EXTERIOR / EXISTING	3' - 9"	8' - 0"	WOOD / GLASS EXISTING	WOOD	EXISTING / REFURBISH	REFURBISH EXISTING DOOR & HARDWARE. REPLACE HARDWARE COMPONENTS AS REQUIRED. INSTALL NEW LEADED GLASS WINDOW IN UPPER BLANK PANEL
2	POCKET / EXISTING	8' - 0"	10' - 0"	WOOD / EXISTING	EXISTING POCKET(S)	EXISTING / REFURBISH	REFURBISH EXISTING POCKET DOORS FOR LIKE NEW APPEARANCE & FUNCTION. REPLACE HARDWARE COMPONENTS AS REQUIRED
3	INTERIOR / EXISTING	3' - 0"	8' - 0"	WOOD / GLASS EXISTING	WOOD	EXISTING / REFURBISH	REFURBISH EXISTING DOOR & HARDWARE. RELOCATE DOOR TO ACCOMODATE COAT CLOSET. W/ TRANSOM 10'-0" OVEARLL
4	INTERIOR (PAIR)	3' - 0"	10' - 0"	WOOD	WOOD	DOUBLE PASSAGE	NEW SPLIT PAIR WOOD DOORS TO MATCH DOOR 5
5	INTERIOR / SALVAGED	3' - 0"	10' - 0"	WOOD / EXISTING	WOOD	EXISTING / REFURBISH	SALVAGED 10'-0" WOOD DOOR. REPAIR & REFURBISH TO LIKE NEW APPEARANCE & FUNCTION. REPLACE HARDWARE COMPONENTS AS REQUIRED
6	INTERIOR / SALVAGED	2' - 4"	8' - 0"	WOOD / GLASS EXISTING	WOOD	LOCKSET	SALVAGED WOOD DOOR & TRANSOM (10'-0" HEIGHT OVERALL). REPAIR & REFURBISH TO LIKE NEW APPEARANCE & FUNCTION. REPLACE HARDWARE COMPONENTS AS REQUIRED
7	INTERIOR / SALVAGED (PAIR)	2' - 6"	8' - 0"	WOOD / EXISTING	POCKET (2)	DOUBLE POCKET	SALVAGED 8'-0" WOOD DOOR. CUT (SPLIT) INTO PAIR FOR DOUBLE POCKET & REFURBISH AS REQUIRED
8	INTERIOR	2' - 0"	8' - 0"	WOOD	POCKET	PRIVACY POCKET	NEW WOOD POCKET DOOR TO MATCH STYLE OF EXISTING DOORS
9	SHOWER	2' - 3"	7' - 0"	GLASS	NONE	SHOWER PULLS, PATCH HINGES	TEMPERED GLASS SHOWER DOOR AND ENCLOSURE WITH FRAMELESS GLASS HARDWARE. SEE ELEVATIONS FOR CONFIGURATION
10	EXTERIOR	2' - 6"	8' - 4 1/4"	WOOD / SCREEN	WOOD	EXTERIOR PULLS, HINGES	SCREENED PORCH DOOR. USE BLACK METAL SCREEN MATERIAL
11	EXTERIOR DOUBLE SLIDER	13' - 0"	8' - 2 1/2"	WOOD / ALUM. / GLASS	WOOD / ALUM.	MANUF. STANDARD	MARVIN ULTIMATE ALUMINUM CLAD DOUBLE SLIDING PATIO DOOR UNIT. CLADDING COLOR T.B.S.
12	INTERIOR	2' - 6"	8' - 0"	WOOD	POCKET	PASSAGE POCKET	FLUSH SOLID CORE WOOD DOOR, PAINTED
13	INTERIOR	2' - 6"	8' - 0"	WOOD	POCKET	PASSAGE POCKET	FLUSH SOLID CORE WOOD DOOR, PAINTED
14	SHOWER	2' - 0"	7' - 0"	GLASS	NONE	SHOWER PULLS, PATCH HINGES	TEMPERED GLASS SHOWER DOOR AND ENCLOSURE WITH FRAMELESS GLASS HARDWARE. SEE ELEVATIONS FOR CONFIGURATION
15	INTERIOR (PAIR)	3' - 0"	7' - 0"	WOOD	WOOD	DOUBLE PASSAGE	NEW PAIR WOOD DOORS TO MATCH STYLE OF EXISTING DOORS.
16	INTERIOR	2' - 6"	8' - 0"	WOOD	WOOD	PRIVACY	NEW WOOD DOOR TO MATCH STYLE OF EXISTING DOORS. REUSE EXISTING HARDWARE AS POSSIBLE OR MATCH EXISTING
17	INTERIOR / SALVAGED	3' - 0"	8' - 0"	WOOD / GLASS EXISTING	WOOD	EXISTING / REFURBISH	SALVAGED WOOD DOOR & TRANSOM (10'-0" HEIGHT OVERALL). REPAIR & REFURBISH TO LIKE NEW APPEARANCE & FUNCTION. REPLACE HARDWARE COMPONENTS AS REQUIRED
18	INTERIOR / SALVAGED	3' - 0"	8' - 0"	WOOD / GLASS EXISTING	WOOD	EXISTING / REFURBISH	SALVAGED WOOD DOOR & TRANSOM (10'-0" HEIGHT OVERALL). REPAIR & REFURBISH TO LIKE NEW APPEARANCE & FUNCTION. REPLACE HARDWARE COMPONENTS AS REQUIRED
19	INTERIOR	2' - 0"	7' - 0"	WOOD	WOOD	PRIVACY POCKET	NEW WOOD DOOR TO MATCH STYLE OF EXISTING DOORS
20	INTERIOR / SALVAGED	2' - 8"	6' - 8"	WOOD / EXISTING	WOOD	LOCKSET	SALVAGED WOOD DOOR. REPAIR & REFURBISH TO LIKE NEW APPEARANCE & FUNCTION. REPLACE HARDWARE COMPONENTS AS REQUIRED
21	INTERIOR (PAIR)	4' - 0"	6' - 8"	WOOD	WOOD	DOUBLE PASSAGE	NEW PAIR WOOD DOORS TO MATCH STYLE OF EXISTING DOORS.
22	INTERIOR (PAIR)	4' - 0"	6' - 8"	WOOD	WOOD	DOUBLE PASSAGE	NEW PAIR WOOD DOORS TO MATCH STYLE OF EXISTING DOORS.
23	EXTERIOR (PAIR)	5' - 0"	6' - 8"	WOOD / ALUM. / GLASS	WOOD / ALUM.	MANUF. STANDARD	MARVIN ULTIMATE ALUMINUM CLAD DOUBLE FRENCH PATIO DOORS. CLADDING COLOR T.B.S.
24	INTERIOR	3' - 0"	6' - 0"	WOOD	WOOD	LOCKSET	NEW WOOD DOOR TO MATCH STYLE OF EXISTING DOORS
25	INTERIOR / SALVAGED	1' - 8"	3' - 9 1/2"	WOOD / EXISTING	WOOD	PULL, BOLT LOCK	SALVAGED ATTIC ACCESS DOOR
26	INTERIOR / EXISTING	1' - 8"	3' - 9 1/2"	WOOD / EXISTING	WOOD	PULL, BOLT LOCK	EXISTING ATTIC ACCESS DOOR TO REMAIN
27	INTERIOR	3' - 0"	6' - 0"	WOOD	WOOD	LOCKSET	NEW WOOD DOOR TO MATCH STYLE OF EXISTING DOORS
28	INTERIOR (PAIR)	4' - 0"	6' - 8"	WOOD	WOOD	LOCKSET	NEW PAIR WOOD DOORS TO MATCH STYLE OF EXISTING DOORS. REUSE EXISTING HARDWARE AS POSSIBLE OR MATCH EXISTING
29	INTERIOR / EXISTING	2' - 6"	6' - 5"	WOOD / EXISTING	WOOD	LOCKSET	EXISTING CLOSET DOOR TO REMAIN. NEW HARDWARE
30	INTERIOR / EXISTING	4' - 8"	6' - 8"	WOOD / EXISTING	WOOD	LOCKSET	EXISTING SHUTTER STYLE DOORS TO REMAIN. NEW HARDWARE
31	INTERIOR / EXISTING	1' - 8"	3' - 9 1/2"	WOOD / EXISTING	WOOD	EXISTING / REFURBISH	EXISTING ATTIC ACCESS DOOR TO REMAIN
32	INTERIOR / EXISTING	1' - 6"	3' - 11 1/2"	WOOD / EXISTING	WOOD	EXISTING / REFURBISH	EXISTING ATTIC ACCESS DOOR TO REMAIN
33	EXTERIOR / EXISTING	2' -5' - 0"	6' - 5"	WOOD / EXISTING	WOOD	EXISTING / REFURBISH	EXISTING EXTERIOR BALCONY DOORS TO REMAIN. REFURBISH & PROVIDE NEW WEATHERSTIPPING AS REQUIRED FOR WATER TIGHTNESS
34	INTERIOR	2' - 3"	6' - 8"	WOOD	WOOD	LOCKSET	NEW WOOD DOOR TO MATCH STYLE OF EXISTING DOORS
35	INTERIOR / EXISTING	1' - 6"	3' - 11 1/2"	WOOD / EXISTING	WOOD	PULL, BOLT LOCK	EXISTING ATTIC ACCESS DOOR TO REMAIN
36	INTERIOR / SALVAGED	3' - 0"	6' - 8"	WOOD / GLASS EXISTING	WOOD	LOCKSET	SALVAGED WOOD DOOR & TRANSOM (8'-0" HEIGHT OVERALL). REPAIR & REFURBISH TO LIKE NEW APPEARANCE & FUNCTION. REPLACE HARDWARE COMPONENTS AS REQUIRED
37	INTERIOR	2' - 3"	6' - 8"	WOOD	WOOD	PASSAGE	NEW PAIR WOOD DOORS TO MATCH STYLE OF EXISTING DOORS.
38	INTERIOR / SALVAGED	2' - 8"	6' - 8"	WOOD / EXISTING	WOOD	LOCKSET	SALVAGED WOOD DOOR. REPAIR & REFURBISH TO LIKE NEW APPEARANCE & FUNCTION. REPLACE HARDWARE COMPONENTS AS REQUIRED
39	INTERIOR / SALVAGED	2' - 6"	6' - 6"	WOOD / EXISTING	WOOD	LOCKSET	SALVAGED WOOD DOOR. REPAIR & REFURBISH TO LIKE NEW APPEARANCE & FUNCTION. REPLACE HARDWARE COMPONENTS AS REQUIRED
40	INTERIOR / SALVAGED	2' - 8"	6' - 8"	WOOD / EXISTING	WOOD	LOCKSET	SALVAGED WOOD DOOR. REPAIR & REFURBISH TO LIKE NEW APPEARANCE & FUNCTION. REPLACE HARDWARE COMPONENTS AS REQUIRED

Door / Hardware Notes

1. ALL EXISTING DOOR HARDWARE TO BE SALVAGED FOR POSSIBLE REUSE. REFURBISH ON DOORS AS INDICATED ON SCHEDULE FOR LIKE NEW APPEARANCE AND FUNCTIONALITY
2. NEW DOOR HARDWARE TO BE EMTEK OR EQUIVALENT. FINAL KNOB STYLE AND FINISH TO BE DETERMINED
3. ALL SALVAGED INTERIOR DOORS TO BE REFURBISHED FOR LIKE NEW APPEARANCE
4. UNLESS OTHERWISE NOTED, NEW DOORS TO BE CUSTOM MILLED TO MATCH EXISTING DOOR STYLE. NEW HINGES TO MATCH TYPE AND ARRANGEMENT OF EXISTING
5. ENSURE ANY EXISTING EXTERIOR DOORS TO REMAIN ARE PROPERLY WEATHER STRIPPED AND WATER TIGHT
6. ALL HINGES TO MATCH HARDWARE STYLE IN FINISH
7. NUMBER OF HINGES PER DOOR TO BE COORDINATED WITH MANUFACTURER / FABRICATOR
8. PROPERLY PREP ALL DOORS (CORE AND/OR MORTISE) DURING FABRICATION FOR HARDWARE INSTALLATION
9. PROVIDE STRIKE PLATES AND DOOR STOPS TO MATCH FINISH OF SPECIFIED HARDWARE AS REQUIRED
10. PROPERLY SEAL AND WEATHER STRIP ANY CUSTOM MILLED EXTERIOR DOORS FOR WATER TIGHTNESS
11. CONTRACTOR TO VERIFY ALL DOOR HARDWARE COMPATIBILITY BEFORE ORDERING AND BRING ANY ISSUES TO THE ATTENTION OF ARCHITECT
12. GLAZING IN ALL FIXED AND OPERABLE PANELS OF SWINGING, SLIDING, AND BIFOLD DOORS SHALL BE SAFETY GLAZED AS PER R308.4.1 OF THE IRC 2015 ED.
13. WIND-BORNE DEBRIS PROTECTION WILL BE PROVIDED FOR NEW GLAZED DOORS IN ACCORDANCE WITH R301.2.1.2 IRC 2015 ED.

These plans and specifications have been prepared by or under our close personal supervision and, to the best of our knowledge and belief, they comply with all city requirements, and that I am ~~supervising~~ (not supervising) the work.

Architect _____

License No. 1876

CHRESTIA STAUB ARCHITECTURE INTERIORS DESIGN +BOARD
7219 PERRIER STREET + NEW ORLEANS, LA

JOHN A. CHRESTIA No. 1876 REGISTERED STATE OF LOUISIANA REGISTERED ARCHITECT

these drawings contain proprietary and confidential information that is the intellectual property of chrestia & staub. reproduction and use of these documents or the underlying design concepts contained therein without the prior and written permission of chrestia & staub is prohibited

Wohlstadter
Renovation & Addition
3704 Coliseum Street
New Orleans, Louisiana 70115

MARK	DATE	DESCRIPTION

SHEET ISSUED: 11/09/2021

PROJECT NO.: Proj. No. 2013

© 2016 BY: CHRESTIA & STAUB

SHEET TITLE: Door Schedule

SHEET NUMBER: A-601

Window Schedule

Type Mark	Count	Height	Width	Sill Height	Material	Glazing Material	Comments
A	3	4' - 0"	3' - 0"	0' - 0"	WOOD EXIST.	SGL PANE EXISTING	EXISTING FULL HEIGHT DOUBLE HUNG WINDOWS. REFURBISH AND REPAIR AS REQUIRED FOR WATER TIGHTNESS
B	9	7' - 3 1/2"	3' - 3"	2' - 8"	WOOD EXIST.	SGL PANE EXISTING	EXISTING DOUBLE HUNG WINDOWS. REFURBISH AND REPAIR AS REQUIRED FOR WATER TIGHTNESS
C	2	7' - 3"	2' - 4 1/2"	2' - 8"	WOOD / EXIST.	TEMPERED INSULATED/	EXISTING DOUBLE HUNG WINDOWS. REFURBISH AND REPAIR AS REQUIRED FOR WATER TIGHTNESS
D	1	3' - 6"	2' - 6"	5' - 0"	ALUM.	LOW E	MARVIN ULTIMATE CLAD OVAL WINDOW WITH CUSTOM MUNTIN DESIGN
E	3	8' - 0"	2' - 3"	0' - 3"	WOOD / ALUM.	INSULATED/ LOW E	MARVIN ULTIMATE CLAD DIRECT GLAZED FIXED WINDOW
F	3	8' - 0"	2' - 9"	0' - 3"	WOOD / ALUM.	INSULATED/ LOW E	MARVIN ULTIMATE CLAD DIRECT GLAZED FIXED WINDOW
G	2	8' - 0"	1' - 7"	0' - 3"	WOOD / ALUM.	INSULATED/ LOW E	MARVIN ULTIMATE CLAD DIRECT GLAZED FIXED WINDOW
H	1	5' - 0"	2' - 3"	3' - 6"	WOOD / ALUM.	INSULATED/ LOW E	MARVIN ULTIMATE CLAD CASEMENT WINDOW
I	2	5' - 4"	3' - 0"	0' - 2"	WOOD EXIST.	SGL PANE EXISTING	EXISTING DOUBLE HUNG WINDOWS. REFURBISH AND REPAIR AS REQUIRED FOR WATER TIGHTNESS

Window Notes

1. REFURBISH EXISTING WINDOWS TO REMAIN FOR LIKE NEW APPEARANCE AND FUNCTIONALITY
2. ENSURE EXISTING WINDOWS TO REMAIN ARE PROPERLY WEATHER STRIPPED AND WATER TIGHT
3. PROVIDE NEW HARDWARE (INCLUDING LOCKS, WEIGHTS, PULLS, ETC.) AS REQUIRED ON EXISTING WINDOWS TO REMAIN
4. PROVIDE NEW SCREENS ON EXISTING WINDOWS AS REQUIRED OR RE-SCREEN AND REFURBISH ANY EXISTING SCREENS FOR LIKE NEW APPEARANCE AND FUNCTIONALITY
5. GLAZING WITHIN 2 FT. OF DOOR SWING AND LESS THAN 5 FT. ABOVE FLOOR OR WALKING SURFACE WILL BE SAFETY GLAZING AS PER, SECTION R 308.4.2, IRC 2015 ED.
6. WINDOWS INSTALLED IN BATHTUB/SHOWER ROOMS LESS THAN 60" VERTICALLY FROM THE FLOOR AND LESS THAN 6' HORIZONTALLY FROM EDGE OF SHOWER OR TUB WILL BE SAFETY GLAZING IN ACCORDANCE WITH SECTION R308.4.5 IRC 2015 ED.
7. WIND-BORNE DEBRIS PROTECTION WILL BE PROVIDED FOR NEW WINDOWS IN ACCORDANCE WITH R301.2.1.2 IRC 2015 ED.
8. NEW WINDOWS: MANUFACTURER - MARVIN WINDOWS & DOORS (OR APPROVED EQUAL)
   PRODUCT LINE - SIGNATURE COLLECTION
   EXTERIOR COLOR - T.B.S.
   WOOD SPECIES - PINE OR PAINT GRADE WOOD
   INTERIOR FINISH - FACTORY PRIME & PREP FOR ONSITE PAINTING
   HARDWARE - ASHLAR HANDLES, COLOR T.B.S. (OPERABLE WINDOWS)
   GLAZING - DOUBLE PANE, LOW-E INSULATED
   DIVIDED LITES - 5/8" OGEE PROFILE SDLS BARS. SEE ELEVATIONS FOR DIVISION LAYOUTS
   EXTERIOR MATERIAL - EXTRUDED ALUMINUM CLADDING
   EXTERIOR TRIM - NONE
   SCREENS - CHARCOAL ALUMINUM SCREEN WITH WOOD FRAME TO PAINTED (OPERABLE WINDOWS)

These plans and specifications have been prepared by or under our close personal supervision and, to the best of our knowledge and belief, they comply with all city requirements, and that I am ~~supervising~~ (not supervising) the work.

Architect _____

License No. 1876

CHRESTIA STAUB ARCHITECTURE INTERIORS DESIGN +BOARD
7219 PERRIER STREET + NEW ORLEANS, LA

JOHN A. CHRESTIA No. 1876 REGISTERED STATE OF LOUISIANA REGISTERED ARCHITECT

these drawings contain proprietary and confidential information that is the intellectual property of chrestia & staub. reproduction and use of these documents or the underlying design concepts contained therein without the prior and written permission of chrestia & staub is prohibited

Wohlstadter
Renovation & Addition
3704 Coliseum Street
New Orleans, Louisiana 70115

MARK	DATE	DESCRIPTION

SHEET ISSUED: 11/09/2021

PROJECT NO.: Proj. No. 2013

© 2016 BY:
CHRESTIA & STAUB

SHEET TITLE:
Window Schedule

SHEET NUMBER:
A-603

Finish Schedule

ROOM NAME	FLOOR	WALLS	CEILING	CEILING HEIGHT	BASE	REMARKS
FOYER	WOOD/ REFINISH	EXISTING PLASTER REPAIR/REPAINT	EXISTING PLASTER REPAIR/REPAINT	±13'-0"	PTD. WOOD (NEW OR EXIST)	
MUSIC ROOM	WOOD/ REFINISH	EXISTING PLASTER REPAIR/REPAINT	EXISTING PLASTER REPAIR/REPAINT	±13'-0"	PTD. WOOD (NEW OR EXIST)	
LIVING ROOM	WOOD/ REFINISH	EXISTING PLASTER REPAIR/REPAINT	EXISTING PLASTER REPAIR/REPAINT	±13'-0"	PTD. WOOD (NEW OR EXIST)	
DINING ROOM	WOOD/ REFINISH	EXISTING PLASTER REPAIR/REPAINT	EXISTING PLASTER REPAIR/REPAINT	±13'-0"	PTD. WOOD (NEW OR EXIST)	
HALLWAY	WOOD/ REFINISH	EXISTING PLASTER REPAIR/REPAINT	EXISTING PLASTER REPAIR/REPAINT	±13'-0"	PTD. WOOD (NEW OR EXIST)	
PRIMARY BEDROOM	WOOD/ REFINISH	EXISTING PLASTER REPAIR/REPAINT	EXISTING PLASTER REPAIR/REPAINT	±13'-0"	PTD. WOOD (NEW OR EXIST)	
PRIMARY BATH	PORCELAIN TILE	PAINTED GYP. BD./ PORCELAIN TILE	PAINTED GYP. BD.	±11'-6"	PORCELAIN TILE	
PRIMARY CLOSET	PORCELAIN TILE	PAINTED GYP. BD.	PAINTED GYP. BD.	±11'-6"	PTD. WOOD (MATCH EXIST)	
POWDER ROOM	WOOD/ REFINISH	EXISTING PLASTER/ PAINTED GYP. BD.	PAINTED GYP. BD.	±9'-0"	PTD. WOOD (MATCH EXIST)	
FAMILY ROOM	WOOD/ REFINISH	PAINTED GYP. BD.	PAINTED GYP. BD.	13'-0"	PTD. WOOD (MATCH EXIST)	
KITCHEN	WOOD/ REFINISH	PAINTED GYP. BD.	PAINTED GYP. BD.	13'-0" / 9'-2"	PTD. WOOD (MATCH EXIST)	
BAR	WOOD/ REFINISH	PAINTED GYP. BD.	PAINTED GYP. BD.	13'-0"	PTD. WOOD (MATCH EXIST)	
GUEST ROOM	WOOD/ REFINISH	PAINTED GYP. BD.	PAINTED GYP. BD.	±10'-6"	PTD. WOOD (MATCH EXIST)	
GUEST BATH	PORCELAIN TILE	PAINTED GYP. BD. PORCELAIN TILE	PAINTED GYP. BD.	9'-0"	PORCELAIN TILE	
BREAKFAST	PORCELAIN TILE	PAINTED GYP. BD.	PAINTED GYP. BD.	9'-2"	PTD. WOOD (MATCH EXIST)	
PREP KITCHEN	PORCELAIN TILE	PAINTED GYP. BD.	PAINTED GYP. BD.	9'-2"	PTD. WOOD (MATCH EXIST)	
LAUNDRY	PORCELAIN TILE	PAINTED GYP. BD.	PAINTED GYP. BD.	9'-2"	PTD. WOOD (MATCH EXIST)	
PANTRY	PORCELAIN TILE	PAINTED GYP. BD.	PAINTED GYP. BD.	9'-2"	PTD. WOOD (MATCH EXIST)	
SCREENED PORCH	COMPOSITE WOOD	PAINTED FIBER CEMENT SIDING	PAINTED 6" V-GROOVE	9'-0"	-	
STORAGE	EXISTING WOOD	PAINTED GYP. BD.	PAINTED GYP. BD.	SLOPES	PAINT EXISTING	
BEDROOM 5	WOOD/ REFINISH	PAINTED GYP. BD.	PAINTED GYP. BD.	SLOPES	PTD. WOOD (NEW OR EXIST)	
PLAYROOM / REC.	WOOD/ REFINISH	REPAIR/PAINT EXISTING WOOD	PAINTED GYP. BD.	VARIES	PAINT EXISTING	
BEDROOM 4	WOOD/ REFINISH	PAINTED GYP. BD.	PAINTED GYP. BD.	8'-6"	PTD. WOOD (NEW OR EXIST)	
BATH 4	PORCELAIN TILE	PAINTED GYP. BD. PORCELAIN TILE	PAINTED GYP. BD.	8'-6"	PORCELAIN TILE	
VESTIBULE	WOOD/ REFINISH	REPAIR/PAINT EXISTING WOOD	PAINTED GYP. BD.	8'-6"	PAINT EXISTING	
BATH 3	PORCELAIN TILE	PAINTED GYP. BD. PORCELAIN TILE	PAINTED GYP. BD.	SLOPES	PORCELAIN TILE	
WALK-IN CLOSET	WOOD/ REFINISH	REPAIR/PAINT EXISTING WOOD	REPAIR/PAINT EXISTING WOOD	SLOPES	PAINT EXISTING	
OFFICE / BEDROOM	WOOD/ REFINISH	REPAIR/PAINT EXISTING WOOD	PAINTED GYP. BD.	VARIES	PAINT EXISTING	

These plans and specifications have been prepared by or under our close personal supervision and, to the best of our knowledge and belief, they comply with all city requirements, and that I am ~~supervising~~ (not supervising) the work.

Architect _____

License No. 1876

CHRESTIA STAUB ARCHITECTURE INTERIORS DESIGN + BOARD
7219 PERRIER STREET + NEW ORLEANS, LA

JOHN A. CHRESTIA 36196 REGISTERED STATE OF LOUISIANA REGISTERED ARCHITECT

these drawings contain proprietary and confidential information that is the intellectual property of chrestia & staub. reproduction and use of these documents or the underlying design concepts contained therein without the prior and written permission of chrestia & staub is prohibited.

Wohlstadter
Renovation
3704 Coliseum Street
New Orleans, LA 70115

MARK	DATE	DESCRIPTION

SHEET ISSUED: 11/09/2021

PROJECT NO.: 2013

© 2016 BY:
CHRESTIA & STAUB

SHEET TITLE:
Finish Schedule

SHEET NUMBER:
A-604

Lighting Legend

- LED WALL MOUNTED LIGHT FIXTURE (CLOSETS)
  3000K, 80+ CRI
- 4" RECESSED LED LIGHT FIXTURE
  HALO ML4D 09 FL 930 E TL44S 2G MW
  "W" INDICATES LENSED TRIM FOR WET/OUTDOOR LOCATIONS (MWWB)
- 4" RECESSED LED ADJUSTABLE ACCENT LIGHT
  HALO HL365A 20 NFL 930 ED010 ICAT TLS3PIN MWWB
- LED FLUSH MOUNT CEILING LIGHT
  3000K 90+ CRI
- DECORATIVE CEILING MOUNT LIGHT SUPPLIED BY OWNER, CONTRACTOR INSTALLED
- CHARGE 1 LIGHT LED TRACK FIXTURE, WHITE
  WAC LIGHTING, L-8010-30-WT (CONFIRM NUMBER OF HEADS W/CLIENT
- TYLER 120 LIGHTING TRACK, WHITE
  WAC LIGHTING, HT8-WT (CONFIRM ALL COMPONENTS & QUANTITIES WITH FINAL TRACK LIGHTING LAYOUTS)
- OUTSKIRTS 15" WIDE LED FLUSH MOUNT CEILING FIXTURE
  QUOIZEL, OST1715BN
- DECORATIVE FLUSH OR SEMI-FLUSH MOUNT FIXTURE SUPPLIED BY OWNER CONTRACTOR INSTALLED
- CEILING FAN SUPPLIED BY OWNER, CONTRACTOR INSTALLED
- LARGE PENDANT FIXTURE SUPPLIED BY OWNER, CONTRACTOR INSTALLED
- SMALL PENDANT FIXTURE SUPPLIED BY OWNER, CONTRACTOR INSTALLED
- DECORATIVE WALL SCONCE SUPPLIED BY OWNER, CONTRACTOR INSTALLED
- BATHROOM VENT FAN
  AERO PURE VSF 110D-S COLOR, WHITE
- LED LINEAR STRIP LIGHTING 3000K COLOR TEMP. 95+CRI
  DIODE LED DI-12V-BLBSC2 W/SLIM CHANNEL & FROSTED LENS
  (CONTRACTOR TO CONFIRM ALL LENGTHS ONSITE. DRIVER DIMMER SWITCH FROM DIODE LED REQUIRED)
- OUTDOOR LED FLOOD LIGHT W/ MOTION SENSOR. 3000K COLOR TEMP. 85+ CRI
  WAC WP-LED430-120VAC-3000K-85-AWT-1930 (MOTION SENSOR MS-120-WT)

- CEILING MOUNT GAS LANTERN, SUPPLIED BY OWNER, INSTALLED BY CONTRACTOR
- SINGLE POLE WALL SWITCH FOR LED LIGHTING (LUTRON DIVA SERIES OR SIMILAR)
- SINGLE POLE DIMMER WALL SWITCH FOR LED LIGHTING (LUTRON DIVA SERIES OR SIMILAR
- JAMB SWITCH FOR LED LIGHTING
- THREE WAY WALL SWITCH (CAN BE COMBINED IN COMBINATION WITH DIMMER WALL SWITCH. LUTRON DIVA SERIES OR SIMILAR)
- UL LISTED SMOKE DETECTOR. TIE INTO ALARM SYSTEM
- UL LISTED CARBON MONOXIDE DETECTOR. TIE INTO ALARM SYSTEM

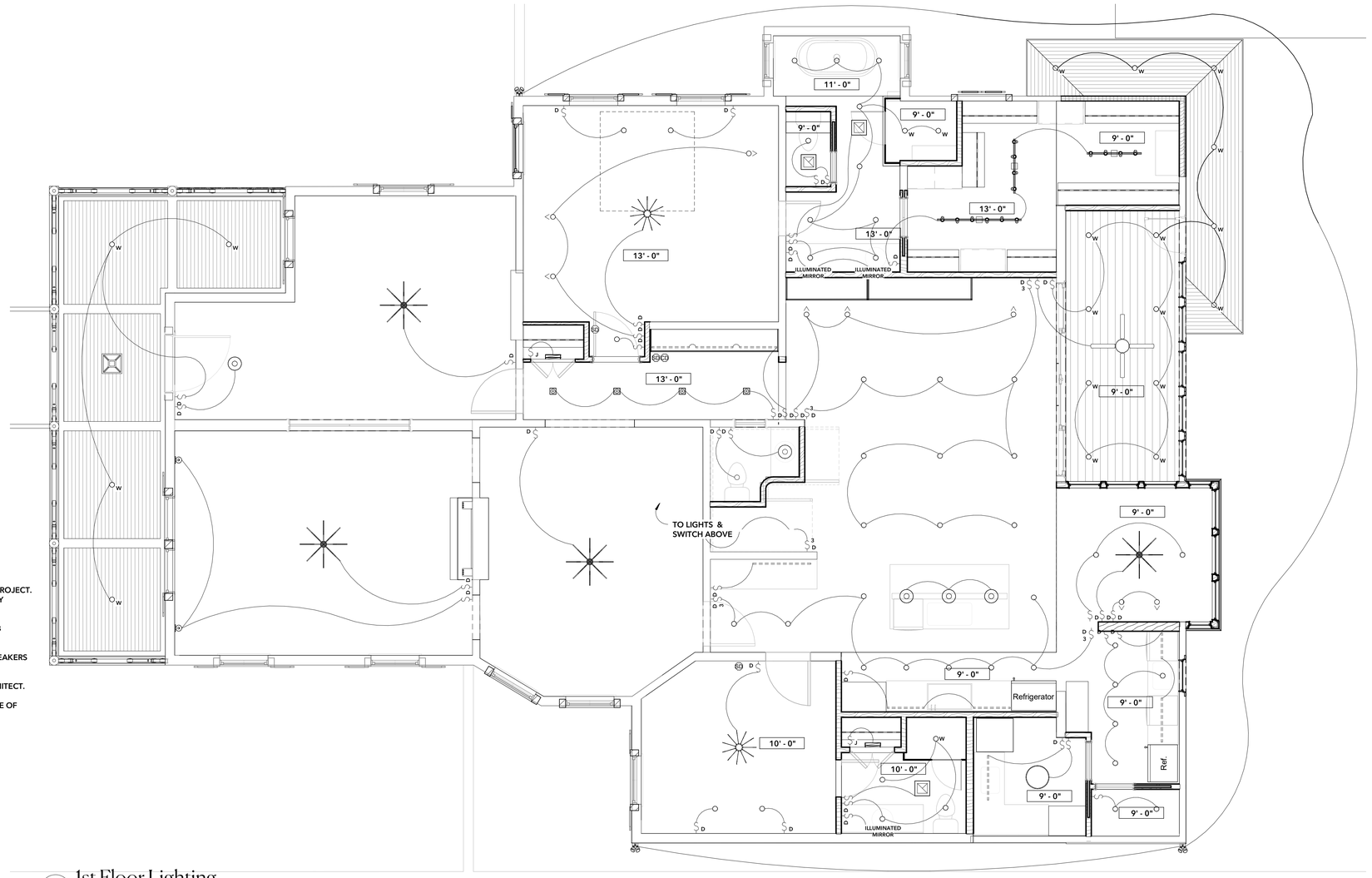

1 1st Floor Lighting
E-100 1/4" = 1'-0"

Lighting Notes

1. ALL ROUGH-IN LIGHTING MATERIALS AND EQUIPMENT TO BE CONTRACTOR SUPPLIED AND INSTALLED UNLESS OTHERWISE NOTED.
2. ALL SPECIFIED LIGHTING TO BE PROVIDED BY OWNER, INSTALLED BY CONTRACTOR.
3. PROVIDE CEILING FRAMING CAPABLE OF SUPPORTING ALL TRIM WORK AND LIGHTING INDICATED.
4. DEVICES NOT SHOWN SHOULD NOT BE INTERPRETED THAT THEY ARE NOT REQUIRED. IT IS THE RESPONSIBILITY OF THE CONTRACTOR TO SATISFY THE REQUIREMENTS OF THE LOCAL JURISDICTION FOR QUANTITY AN DLOCATION OF ALL DEVICES THROUGOUT THE PROJECT. OBATIN APPROVAL OF THE LAOUT FROM THE ARCHITECT PRIOR TO INSTALLATION OF ANY ADDITIONAL SYSTEMS OR DEVICES.
5. PROVIDE BLOCKING IN CEILING AT ALL PENDANT FIXTURE LOCATIONS TO SUPPORT 300LB DEAD LOAD.
6. PAINT ALL FALNGES ON CEILING LIGHT FIXTURES, HVAC GRILEES AND DIFFUSERS, AND SPEAKERS TO MATCH PAINT ON CEILING.
7. COORDINATE ADDITIONAL LANDSCAPE AND EXTERIOR LIGHTING WITH LANDSCAPE ARCHITECT.
8. CONTRACTOR TO MAKE MOULDS OF ALL EXISTING PLASTER CEILING MEDALLIONS IN CASE OF DAMAGE DURING CONSTRUCTION.

These plans and specifications have been prepared by or under our close personal supervision and, to the best of our knowledge and belief, they comply with all city requirements, and that I am ~~supervising~~ (not supervising) the work.

Architect _____

License No. 1876

CHRESTIA STAUB ARCHITECTURE INTERIORS DESIGN +BOARD
7219 PERRIER STREET + NEW ORLEANS, LA

JOHN A. CHRESTIA No. 1876 REGISTERED STATE OF LOUISIANA REGISTERED ARCHITECT

these drawings contain proprietary and confidential information that is the intellectual property of chrestia & staub. reproduction and use of these documents or the underlying design concepts contained therein without the prior and written permission of chrestia & staub is prohibited

Wohlstadter
Renovation & Addition
3704 Coliseum Street
New Orleans, Louisiana 70115

MARK	DATE	DESCRIPTION

SHEET ISSUED: 11/09/2021

PROJECT NO.: Proj. No. 2013

© 2016 BY: CHRESTIA & STAUB

SHEET TITLE:
1st Floor Lighting Plan

SHEET NUMBER:
E-100

Lighting Legend

- LED WALL MOUNTED LIGHT FIXTURE (CLOSETS)
  3000K, 80+ CRI
- 4" RECESSED LED LIGHT FIXTURE
  HALO ML4D 09 FL 930 E TL44S 2G MW
  "W" INDICATES LENSED TRIM FOR WET/OUTDOOR LOCATIONS (MWWB)
- 4" RECESSED LED ADJUSTABLE ACCENT LIGHT
  HALO HL36SA 20 NFL 930 ED010 ICAT TLS3PIN MWWB
- LED FLUSH MOUNT CEILING LIGHT
  3000K 90+ CRI
- DECORATIVE CEILING MOUNT LIGHT SUPPLIED BY OWNER,
  CONTRACTOR INSTALLED
- CHARGE 1 LIGHT LED TRACK FIXTURE, WHITE
  WAC LIGHTING, L-8010-30-WT (CONFIRM NUMBER OF HEADS W/CLIENT
- TYLER 120 LIGHTING TRACK, WHITE
  WAC LIGHTING, HT8-WT (CONFIRM ALL COMPONENTS & QUANTITIES WITH
  FINAL TRACK LIGHTING LAYOUTS)
- OUTSKIRTS 15" WIDE LED FLUSH MOUNT CEILING FIXTURE
  QUOIZEL, OST1715BN
- DECORATIVE FLUSH OR SEMI-FLUSH MOUNT FIXTURE SUPPLIED BY OWNER
  CONTRACTOR INSTALLED
- CEILING FAN SUPPLIED BY OWNER, CONTRACTOR INSTALLED
- LARGE PENDANT FIXTURE SUPPLIED BY OWNER, CONTRACTOR INSTALLED
- SMALL PENDANT FIXTURE SUPPLIED BY OWNER, CONTRACTOR INSTALLED
- DECORATIVE WALL SCONCE SUPPLIED BY OWNER, CONTRACTOR INSTALLED
- BATHROOM VENT FAN
  AERO PURE VSF 110D-S COLOR, WHITE
- LED LINEAR STRIP LIGHTING 3000K COLOR TEMP. 95+CRI
  DIODE LED DI-12V-BLBSC2 W/SLIM CHANNEL & FROSTED LENS
  (CONTRACTOR TO CONFIRM ALL LENGTHS ONSITE. DRIVER DIMMER
  SWITCH FROM DIODE LED REQUIRED)
- OUTDOOR LED FLOOD LIGHT W/ MOTION SENSOR. 3000K COLOR TEMP. 85+ CRI
  WAC WP-LED430-120VAC-3000K-85-AWT-1930 (MOTION SENSOR MS-120-WT)

- CEILING MOUNT GAS LANTERN, SUPPLIED BY OWNER, INSTALLED BY CONTRACTOR
- S SINGLE POLE WALL SWITCH FOR LED LIGHTING (LUTRON DIVA SERIES OR SIMILAR)
- S_D SINGLE POLE DIMMER WALL SWITCH FOR LED LIGHTING (LUTRON DIVA SERIES OR SIMILAR
- S_J JAMB SWITCH FOR LED LIGHTING
- S_3 THREE WAY WALL SWITCH (CAN BE COMBINED IN COMBINATION WITH DIMMER WALL SWITCH.
  LUTRON DIVA SERIES OR SIMILAR)
- SD UL LISTED SMOKE DETECTOR. TIE INTO ALARM SYSTEM
- CD UL LISTED CARBON MONOXIDE DETECTOR. TIE INTO ALARM SYSTEM

Lighting Notes

1. ALL ROUGH-IN LIGHTING MATERIALS AND EQUIPMENT TO BE CONTRACTOR SUPPLIED AND INSTALLED UNLESS OTHERWISE NOTED.
2. ALL SPECIFIED LIGHTING TO BE PROVIDED BY OWNER, INSTALLED BY CONTRACTOR.
3. PROVIDE CEILING FRAMING CAPABLE OF SUPPORTING ALL TRIM WORK AND LIGHTING INDICATED.
4. DEVICES NOT SHOWN SHOULD NOT BE INTERPRETED THAT THEY ARE NOT REQUIRED. IT IS THE RESPONSIBILITY OF THE CONTRACTOR TO SATISFY THE REQUIREMENTS OF THE LOCAL JURISDICTION FOR QUANTITY AN DLOCATION OF ALL DEVICES THROUGOUT THE PROJECT. OBATIN APPROVAL OF THE LAOUT FROM THE ARCHITECT PRIOR TO INSTALLATION OF ANY ADDITIONAL SYSTEMS OR DEVICES.
5. PROVIDE BLOCKING IN CEILING AT ALL PENDANT FIXTURE LOCATIONS TO SUPPORT 300LB DEAD LOAD.
6. PAINT ALL FALNGES ON CEILING LIGHT FIXTURES, HVAC GRILEES AND DIFFUSERS, AND SPEAKERS TO MATCH PAINT ON CEILING.
7. COORDINATE ADDITIONAL LANDSCAPE AND EXTERIOR LIGHTING WITH LANDSCAPE ARCHITECT.
8. CONTRACTOR TO MAKE MOULDS OF ALL EXISTING PLASTER CEILING MEDALLIONS IN CASE OF DAMAGE DURING CONSTRUCTION.

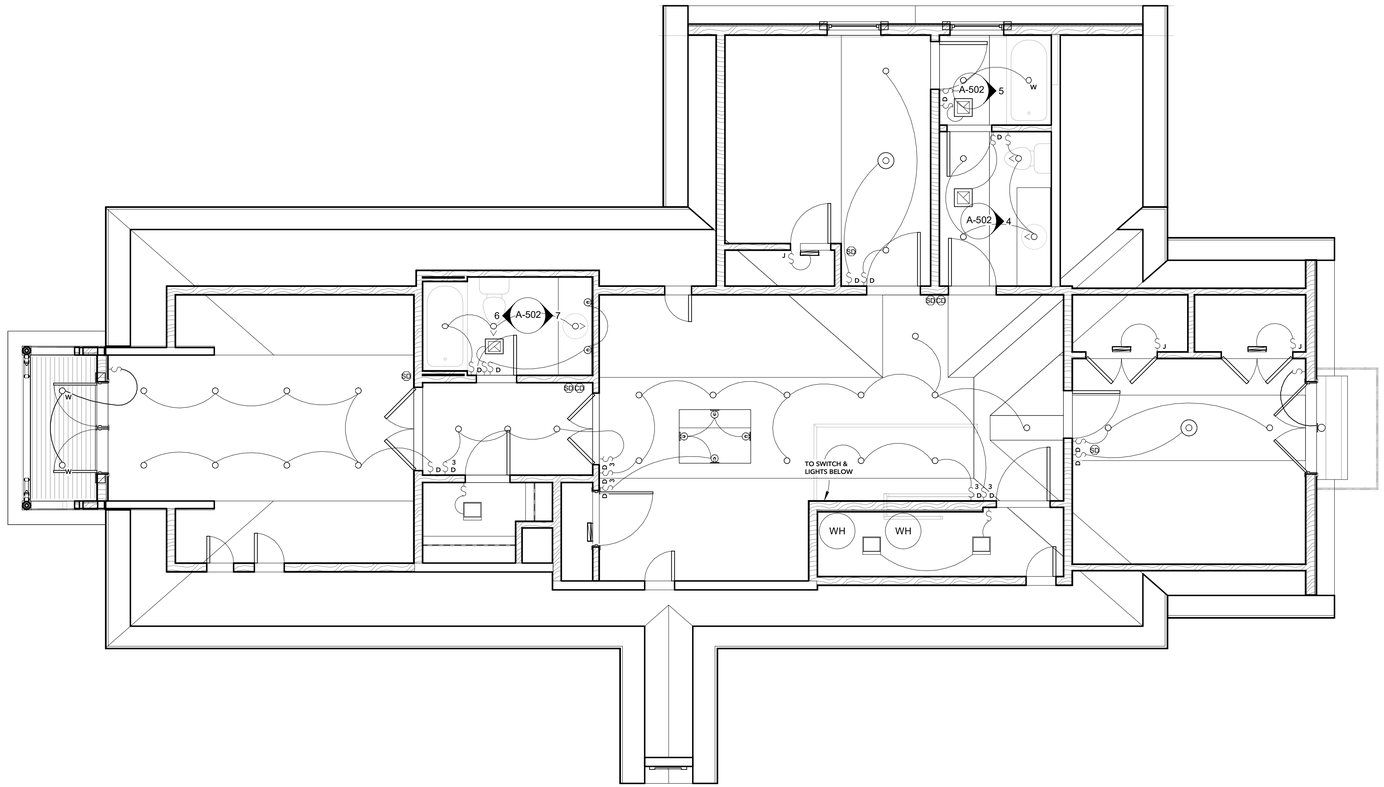

1 2nd Floor Lighting
E-101 1/4" = 1'-0"

These plans and specifications have been prepared by or under our close personal supervision and, to the best of our knowledge and belief, they comply with all city requirements, and that I am ~~supervising~~ (not supervising) the work.

Architect _____

License No. 1876

CHRESTIA STAUB ARCHITECTURE INTERIORS DESIGN + BOARD
7219 PERRIER STREET + NEW ORLEANS, LA

JOHN A. CHRESTIA No. 1876 REGISTERED STATE OF LOUISIANA REGISTERED ARCHITECT

these drawings contain proprietary and confidential information that is the intellectual property of chrestia & staub. reproduction and use of these documents or the underlying design concepts contained therein without the prior and written permission of chrestia & staub is prohibited

Wohlstadter
Renovation & Addition
3704 Coliseum Street
New Orleans, Louisiana 70115

MARK	DATE	DESCRIPTION

SHEET ISSUED: 11/09/2021

PROJECT NO.: Proj. No. 2013

© 2016 BY:
CHRESTIA & STAUB

SHEET TITLE:
2nd Floor Lighting Plan

SHEET NUMBER:
E-101

Electrical Legend

42 — RECEPTACLE: 120 V FLUSH DUPLEX GROUNDED (LUTRON CLARO SERIES OR SIMILAR)
MOUNTING HEIGHT (INCHES)
DEFAULT MOUNTING IS HORIZONTAL, CENTERED IN BASEBOARD
PROVIDE GFI IN WET LOCATIONS

W — WEATHER PROOF 120V FLUSH DUPLEX GROUNDED RECEPTACLE
WALL MOUNTED AT EXTERIOR LOCATION(S)

RECEPTACLE: 120V DUPLEX GROUNDED RECESSED FLOOR OUTLET
ARLINGTON FLBR5420AB (OR SIMILAR)

TV — CABLE TELEVISION CONNECTION

G — NATURAL GAS CONNECTION. CONFIRM SIZE WITH APPLIANCE
OR EQUIPMENT SPECIFIED

Electrical Notes

1. ALL ROUGH-IN ELECTRICAL MATERIALS AND EQUIPMENT TO BE CONTRACTOR SUPPLIED AND INSTALLED UNLESS OTHERWISE NOTED.
2. ALL TYPICAL WALL MOUNTED ELECTRICAL RECEPTACLES SHALL BE MOUNTED HORIZONTALLY IN THE CENTER OF THE BASE MOULDING UNLESS OTHERWISE NOTED.
3. CONSULT LANDSCAPING DRAWINGS FOR EXTERIOR POWER REQUIREMENTS NOT DIRECTLY ATTACHED TO THE MAIN STRUCTURE.
4. RECEPTACLES INDICATED FOR APPLIANCES TO BE ON DEDICATED CIRCUITS. CONFIRM ADDITIONAL DEDICATED CIRCUIT REQUIREMENTS WITH ANY I.T. / A.V. CONSULTANTS.
5. COORDINATE I.T. / A.V. REQUIREMENTS WITH CLIENT'S CONSULTANT(S). PROVIDE INFRASTRUCTURE FOR WIRELESS CONNECTIVITY THROUGHOUT STRUCTURE. COORDINATE LOCATIONS FOR I.T. / A.V. EQUIPMENT WITH CLIENT AND ARCHITECT FOR FINAL APPROVAL.
6. REMOVE ANY EXISTING, UNUSED OR "DEAD" WIRING FROM BUILDING INCLUDING, BUT NOT LIMITED TO, EXISTING KNOB AND TUBE WIRING, ETC.

1 First Floor
E-102 1/4" = 1'-0"

These plans and specifications have been prepared by or under our close personal supervision and, to the best of our knowledge and belief, they comply with all city requirements, and that I am ~~supervising~~ (not supervising) the work.

Architect _____

License No. 1876

CHRESTIA STAUB ARCHITECTURE INTERIORS DESIGN +BOARD
7219 PERRIER STREET + NEW ORLEANS, LA

JOHN A. CHRESTIA No. 1876 STATE OF LOUISIANA REGISTERED ARCHITECT

these drawings contain proprietary and confidential information that is the intellectual property of chrestia & staub. reproduction and use of these documents or the underlying design concepts contained therein without the prior and written permission of chrestia & staub is prohibited

Wohlstadter
Renovation & Addition
3704 Coliseum Street
New Orleans, Louisiana 70115

MARK	DATE	DESCRIPTION

SHEET ISSUED: 11/09/2021

PROJECT NO.: Proj. No. 2013

© 2016 BY: CHRESTIA & STAUB

SHEET TITLE:
1st Floor Electrical Plan

SHEET NUMBER:
E-102

Electrical Legend

42 — RECEPTACLE: 120 V FLUSH DUPLEX GROUNDED (LUTRON CLARO SERIES OR SIMILAR)
MOUNTING HEIGHT (INCHES)
DEFAULT MOUNTING IS HORIZONTAL, CENTERED IN BASEBOARD
PROVIDE GFI IN WET LOCATIONS

W — WEATHER PROOF 120V FLUSH DUPLEX GROUNDED RECEPTACLE
WALL MOUNTED AT EXTERIOR LOCATION(S)

RECEPTACLE: 120V DUPLEX GROUNDED RECESSED FLOOR OUTLET
ARLINGTON FLBR5420AB (OR SIMILAR)

TV — CABLE TELEVISION CONNECTION

G — NATURAL GAS CONNECTION. CONFIRM SIZE WITH APPLIANCE
OR EQUIPMENT SPECIFIED

Electrical Notes

1. ALL ROUGH-IN ELECTRICAL MATERIALS AND EQUIPMENT TO BE CONTRACTOR SUPPLIED AND INSTALLED UNLESS OTHERWISE NOTED.
2. ALL TYPICAL WALL MOUNTED ELECTRICAL RECEPTACLES SHALL BE MOUNTED HORIZONTALLY IN THE CENTER OF THE BASE MOULDING UNLESS OTHERWISE NOTED.
3. CONSULT LANDSCAPING DRAWINGS FOR EXTERIOR POWER REQUIREMENTS NOT DIRECTLY ATTACHED TO THE MAIN STRUCTURE.
4. RECEPTACLES INDICATED FOR APPLIANCES TO BE ON DEDICATED CIRCUITS. CONFIRM ADDITIONAL DEDICATED CIRCUIT REQUIREMENTS WITH ANY I.T. / A.V. CONSULTANTS.
5. COORDINATE I.T. / A.V. REQUIREMENTS WITH CLIENT'S CONSULTANT(S). PROVIDE INFRASTRUCTURE FOR WIRELESS CONNECTIVITY THROUGHOUT STRUCTURE. COORDINATE LOCATIONS FOR I.T. / A.V. EQUIPMENT WITH CLIENT AND ARCHITECT FOR FINAL APPROVAL.
6. REMOVE ANY EXISTING, UNUSED OR "DEAD" WIRINIG FROM BUILDING INCLUDING, BUT NOT LIMITED TO, EXISTING KNOB AND TUBE WIRING, ETC.

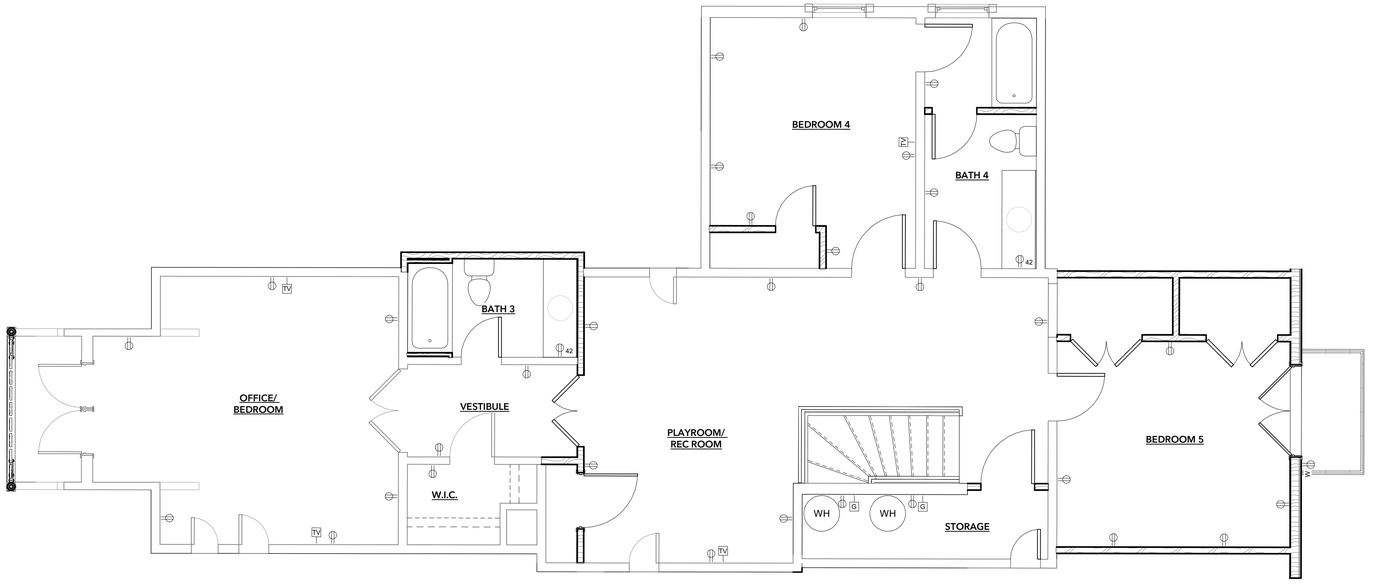

1 2nd Floor
E-103 1/4" = 1'-0"

These plans and specifications have been prepared by or under our close personal supervision and, to the best of our knowledge and belief, they comply with all city requirements, and that I am ~~supervising~~ (not supervising) the work.

Architect _____

License No. 1876

CHRESTIA STAUB ARCHITECTURE INTERIORS DESIGN +BOARD
7219 PERRIER STREET + NEW ORLEANS, LA

JOHN A. CHRESTIA No. 1876 REGISTERED ARCHITECT STATE OF LOUISIANA

these drawings contain proprietary and confidential information that is the intellectual property of chrestia & staub. reproduction and use of these documents or the underlying design concepts contained therein without the prior and written permission of chrestia & staub is prohibited

Wohlstadter
Renovation & Addition
3704 Coliseum Street
New Orleans, Lousiana 70115

MARK	DATE	DESCRIPTION

SHEET ISSUED: 11/09/2021

PROJECT NO.: Proj. No. 2013

© 2016 BY:
CHRESTIA & STAUB

SHEET TITLE:
2nd Floor
Electrical Plan

SHEET NUMBER:
E-103

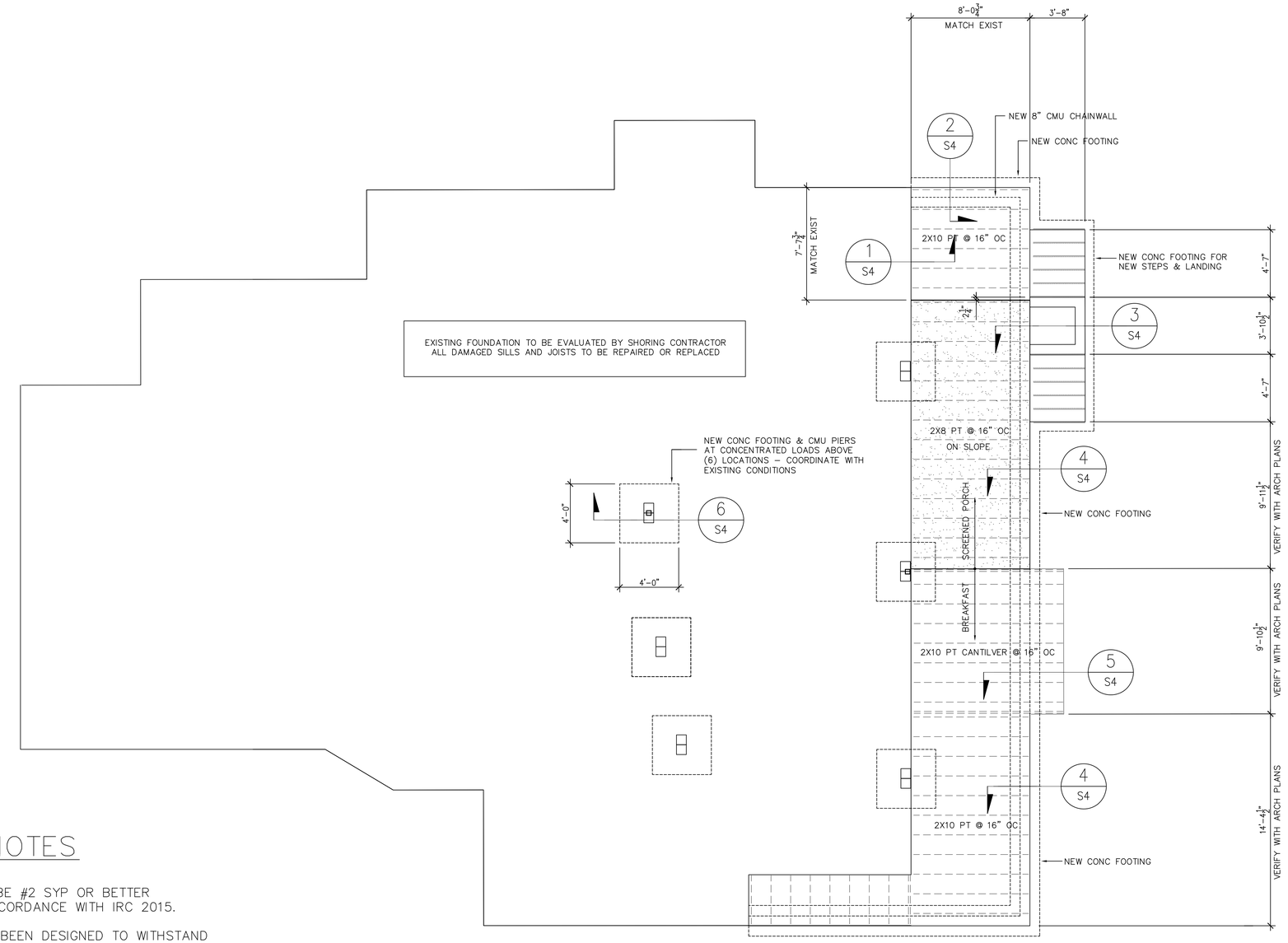

FOUNDATION PLAN
SCALE: 1/4"=1'-0"

FRAMING NOTES

1. ALL FRAMING SHALL BE #2 SYP OR BETTER AND SHALL BE IN ACCORDANCE WITH IRC 2015.
2. THE STRUCTURE HAS BEEN DESIGNED TO WITHSTAND A BASIC WIND SPEED OF 130 MPH AS REQUIRED BY IRC 2015.
3. SIMPSON H8 HURRICANE ANCHORS SHALL BE INSTALLED AT ALL RAFTER TO PLATE CONNECTIONS.
4. A CONTINUOUS LOAD PATH SHALL BE PROVIDED BY THE EXTERIOR SHEATHING AS INDICATED.
5. ALL EXTERIOR SHEATHING SHALL BE 1/2" CDX PLYWOOD OR EQUAL. THE SHEATHING SHALL BE ATTACHED WITH 8D NAILS AT 8" OC AT ALL STUDS, PLATES AND RIM JOISTS.
6. ALL RAFTERS UNLESS NOTED SHALL BE 2X8 @ 16" OC WITH 2X6 COLLAR TIES @ 32" OC. ALL RAFTERS IN EXCESS OF 12 FEET SHALL BE BRACED TO SUPPORTING WALLS BELOW.
7. THE ROOF SHEATHING SHALL BE 5/8" CDX PLYWOO OR EQUAL ATTACH SHEATHING WITH 8D NAILS @ 8" OC AT ALL SUPPORTS.

STATE OF LOUISIANA
ROBERT A. BOUCHON
License No. 24004
PROFESSIONAL ENGINEER
IN
CIVIL ENGINEERING
Robert Bouchon
July 15, 2021

ROBERT A. BOUCHON
CONSULTING ENGINEER, LLC
1050 S. NORMAN C. FRANCIS PKWY., SUITE 314
NEW ORLEANS, LA 70125
ROBERTBOUCHON@AOL.COM 504-304-2312

THE WOHLSTADTER RESIDENCE
3704 COLISEUM
NEW ORLEANS, LA

DATE	07.15.21
REV 1	08.11.21

FOR CONSTRUCTION

DRAWN BY	RB
CHECKED	RB

SHEET TITLE
FOUNDATION PLAN

SHEET NUMBER
S1

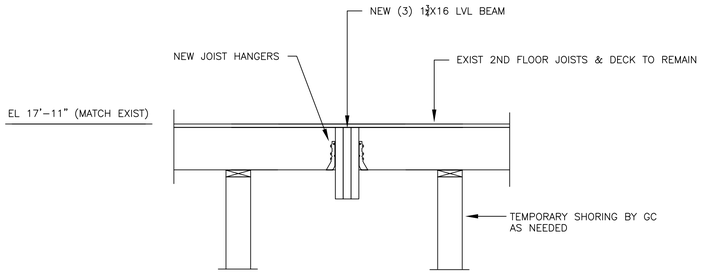

1 / S2 FRAMING SECTION AT NEW BEAM
SCALE: 3/4"=1'-0"

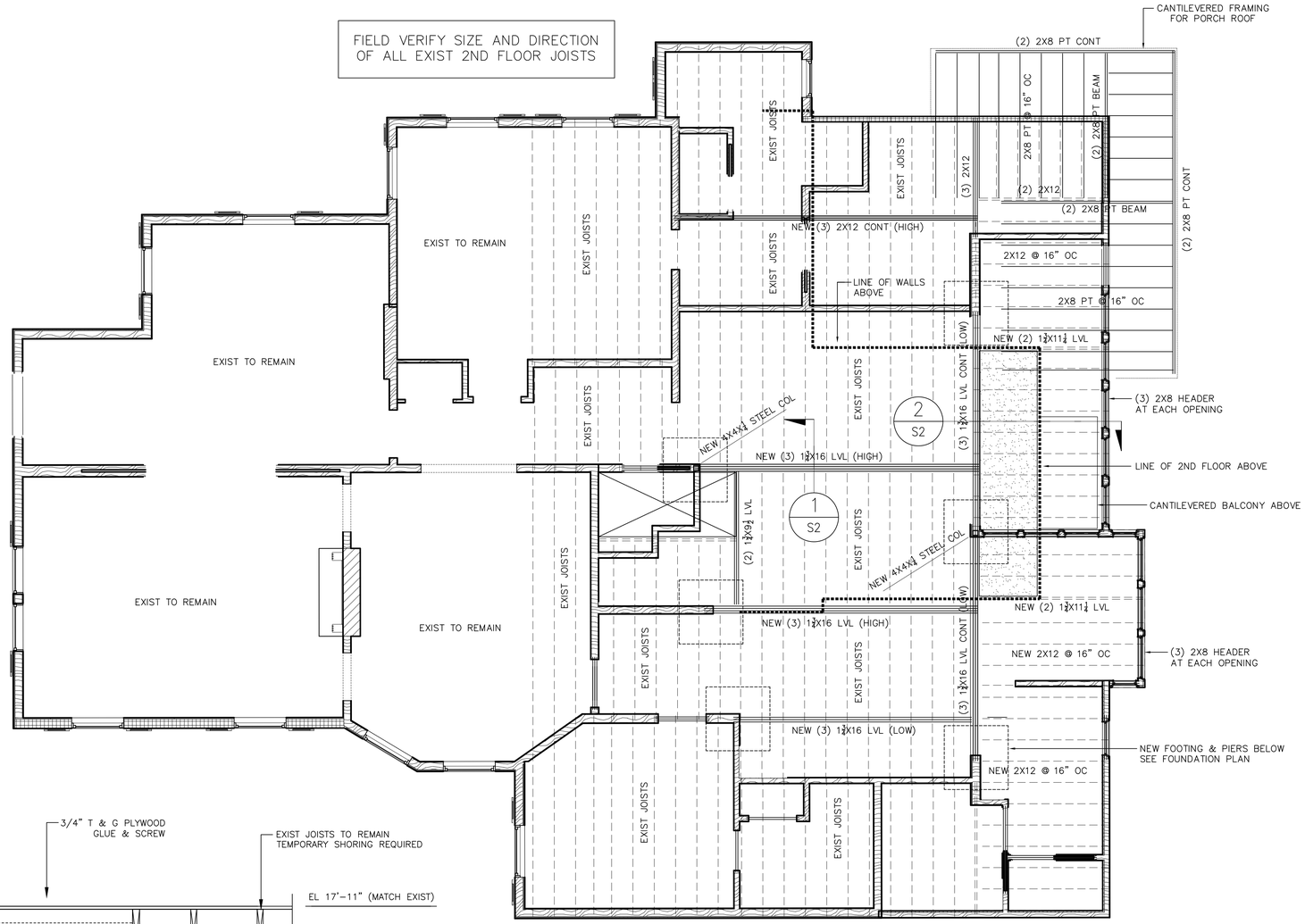

SECOND FLOOR FRAMING PLAN
SCALE: 1/4"=1'-0"

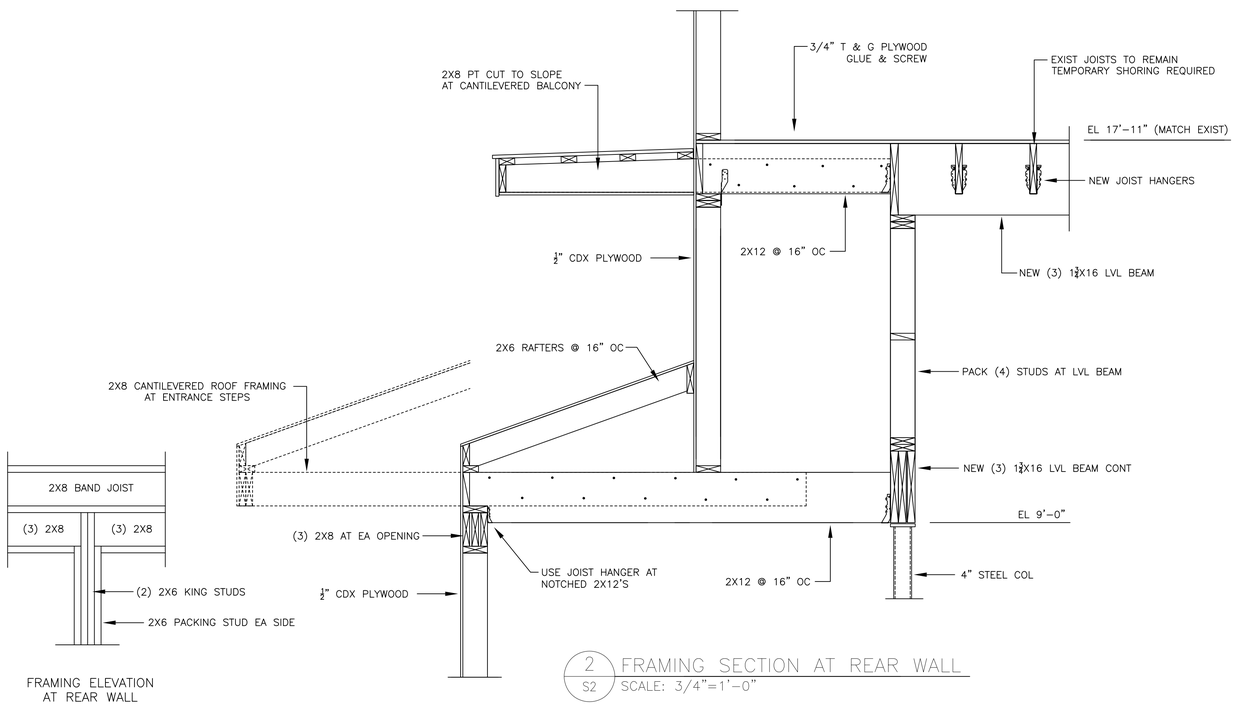

2 / S2 FRAMING SECTION AT REAR WALL
SCALE: 3/4"=1'-0"

FOUNDATION NOTES

1. ALL CONCRETE SHALL BE 3000 PSI STANDARD WEIGHT.
2. REINFORCING STEEL SHALL BE NEW BILLET ASTM A-615 GRADE 60.
3. ALL WELDED WIRE FABRIC SHALL BE ASTM A-497 AND SHALL BE PROVIDED IN SHEETS. LAP THE MESH TWO WIRE SPACES EACH WAY AND PROVIDE 2" CONC BRICKS AT 48 INCHES ON CENTER EACH WAY TO SUPPORT THE MESH.
4. THE FOUNDATION HAS BEEN DESIGNED FOR AN ALLOWABLE SOIL BEARING PRESSURE OF 1000 PSF TO MATCH THE EXISTING SOIL BEARING FOUNDATION. ALL FOOTINGS SHALL BEAR ON NATURAL UNDISTURBED SOIL. ALL FOOTING EXCAVATIONS SHALL BE THOROUGHLY DRIED AND COMPACTED PRIOR TO POURING ANY CONCRETE.
5. ALL WORK SHALL BE CLOSELY COORDINATED WITH EXISTING CONDITIONS. TEMPORARY BRACING AND SHORING SHALL BE PROVIDED BY THE GC AS NEEDED DURING CONSTRUCTION.

STATE OF LOUISIANA
ROBERT A. BOUCHON
License No. 24004
PROFESSIONAL ENGINEER
IN
CIVIL ENGINEERING
Robert Bouchon
July 15, 2021

ROBERT A. BOUCHON
CONSULTING ENGINEER, LLC
1050 S. NORMAN C. FRANCIS PKWY., SUITE 314
NEW ORLEANS, LA 70125
ROBERTBOUCHON@AOL.COM 504-304-2312

THE WOHLSTADTER RESIDENCE
3704 COLISEUM
NEW ORLEANS, LA

DATE 07.15.21
FOR CONSTRUCTION

DRAWN BY RB
CHECKED RB

SHEET TITLE
2ND FLOOR FRAMING PLAN

SHEET NUMBER
S2

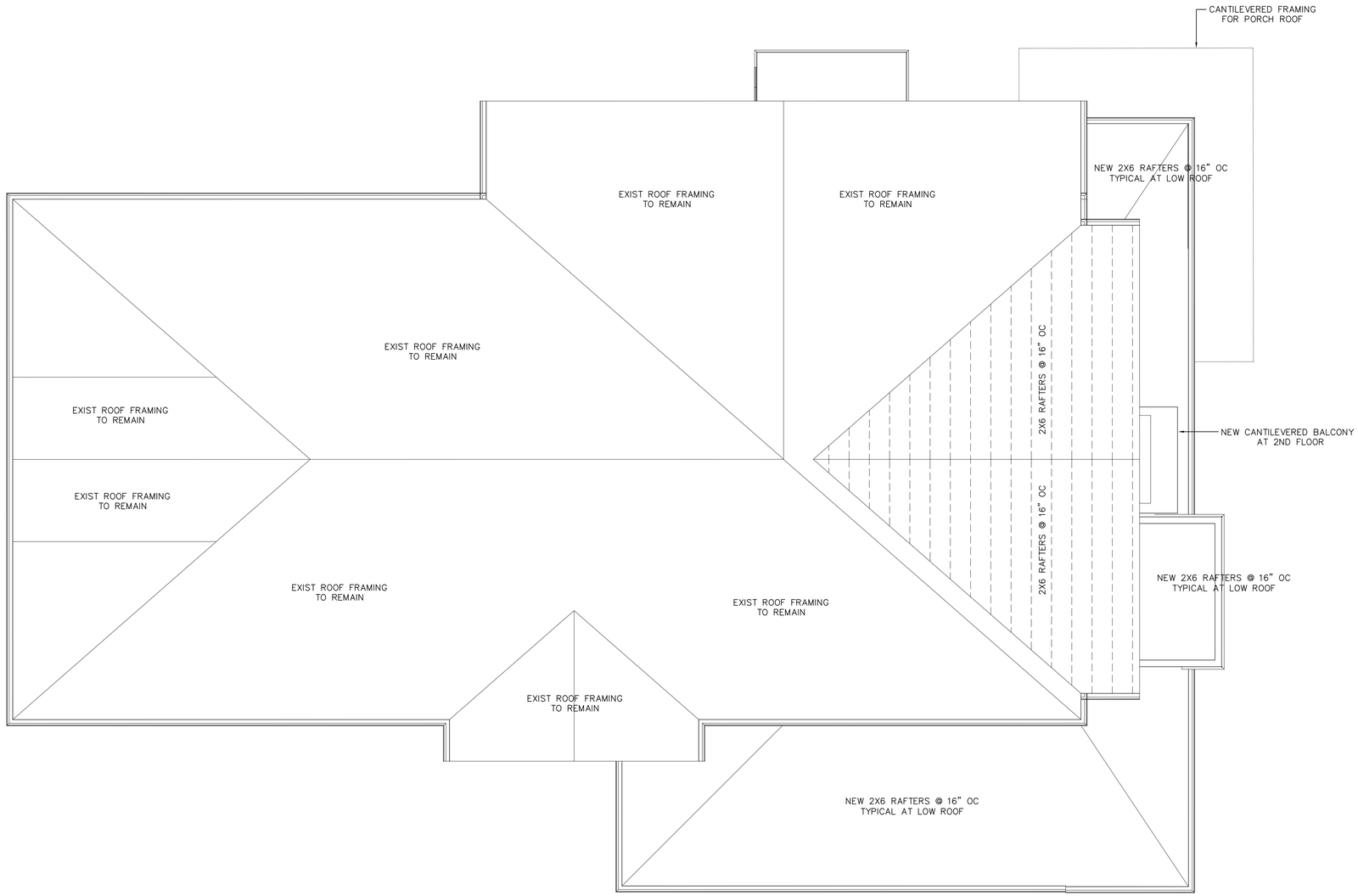

ROOF FRAMING PLAN
SCALE: 1/4"=1'-0"

ROBERT A. BOUCHON
License No. 24004
PROFESSIONAL ENGINEER
IN
CIVIL ENGINEERING
STATE OF LOUISIANA

Robert Bouchon
July 15, 2021

ROBERT A. BOUCHON
CONSULTING ENGINEER, LLC
1050 S. NORMAN C. FRANCIS PKWY., SUITE 314
NEW ORLEANS, LA 70125
ROBERTBOUCHON@AOL.COM 504-304-2312

THE WOHLSTADTER RESIDENCE
3704 COLISEUM
NEW ORLEANS, LA

DATE 07.15.21

FOR CONSTRUCTION

DRAWN BY RB
CHECKED RB

SHEET TITLE
ROOF FRAMING PLAN

SHEET NUMBER
S3

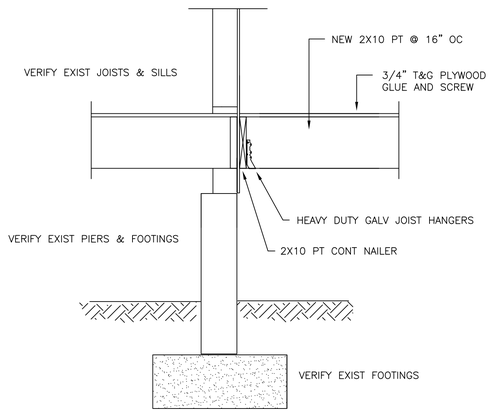

1 / S4 SECTION AT NEW FLOOR FRAMING
SCALE: 3/4"=1'-0"

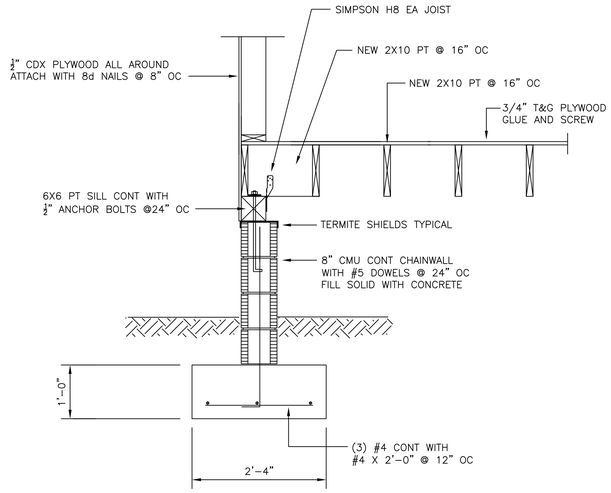

2 / S4 SECTION AT EXTERIOR FOOTING
SCALE: 3/4"=1'-0"

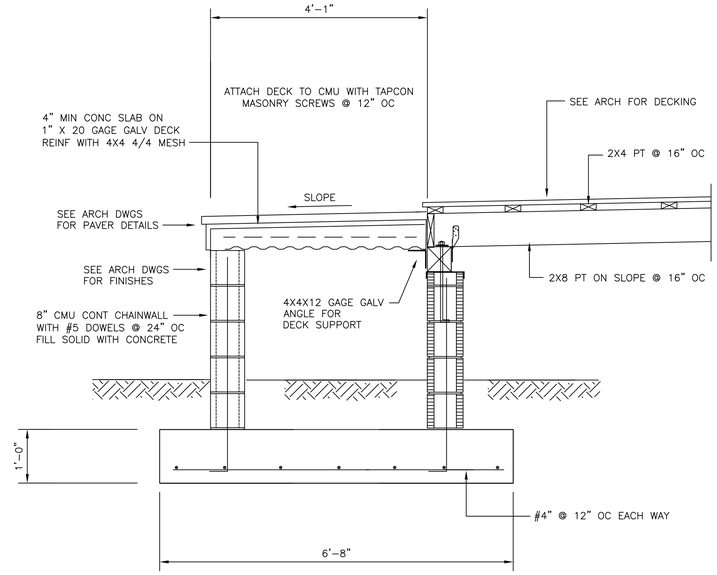

3 / S4 SECTION AT REAR STAIR LANDING
SCALE: 3/4"=1'-0"

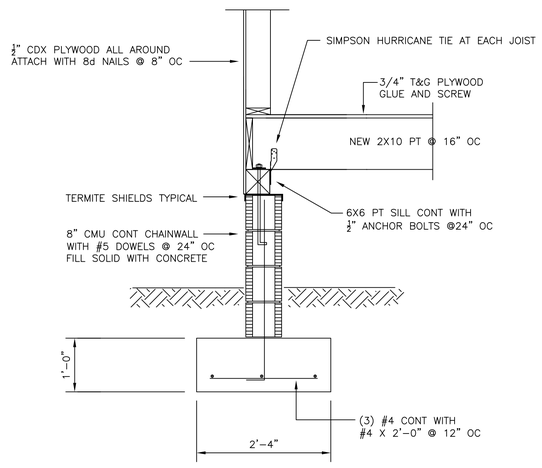

4 / S4 SECTION AT REAR PORCH ADDITION
SCALE: 3/4"=1'-0"

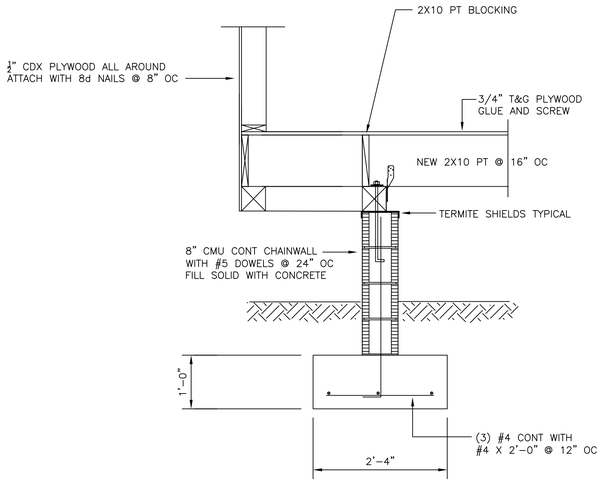

5 / S4 SECTION AT REAR PORCH ADDITION
SCALE: 3/4"=1'-0"

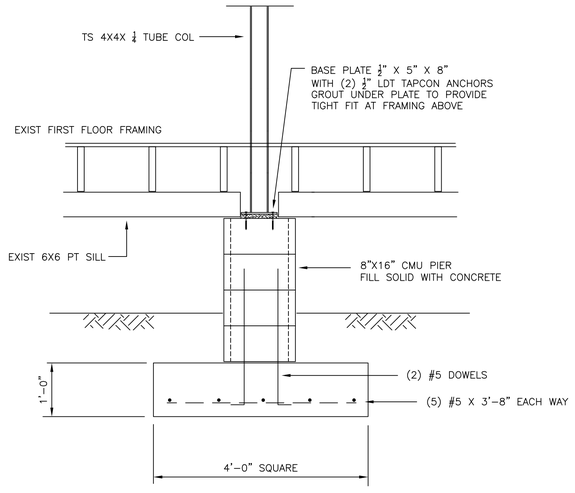

6 / S4 SECTION AT NEW FOOTING & PIER
SCALE: 3/4"=1'-0"

STATE OF LOUISIANA
ROBERT A. BOUCHON
License No. 24004
PROFESSIONAL ENGINEER
CIVIL ENGINEERING
Robert Bouchon
July 15, 2021

ROBERT A. BOUCHON
CONSULTING ENGINEER, LLC
1050 S. NORMAN C. FRANCIS PKWY., SUITE 314
NEW ORLEANS, LA 70125
ROBERTBOUCHON@AOL.COM 504-304-2312

THE WOHLSTADTER RESIDENCE
3704 COLISEUM
NEW ORLEANS, LA

DATE 07.15.21
REV 1 08.11.21
FOR CONSTRUCTION

DRAWN BY RB
CHECKED RB

SHEET TITLE
FOUNDATION DETAILS

SHEET NUMBER
S4