FINAL PERMIT RELEASE

DEPARTMENT OF SAFETY AND PERMITS
PLAN REVIEW DIVISION

These plans and specifications have been examined and no evidence of violation of the Comprehensive Zoning Ordinance or other laws adopted by the City of New Orleans, has been noted. This action is contingent upon the work being performed in accordance with the approved plans, construction and final inspection upon completion.
Chief Plans Examiner

Any changes to or deviation from approved plans must be immediately reported to the Department of Safety and Permits and work must stop until the revised plans have been examined and approved.

Work beyond that which is specified in these approved drawings is not authorized by this permit. Additional work may require permits and is subject to fines as prescribed in Section 108.2 of the New Orleans Amendments to the International Building Code and/or revocation of the building permit.

Chief Plans Examiner

REVIEWED FOR CODE COMPLIANCE

dclee 10/31/2022

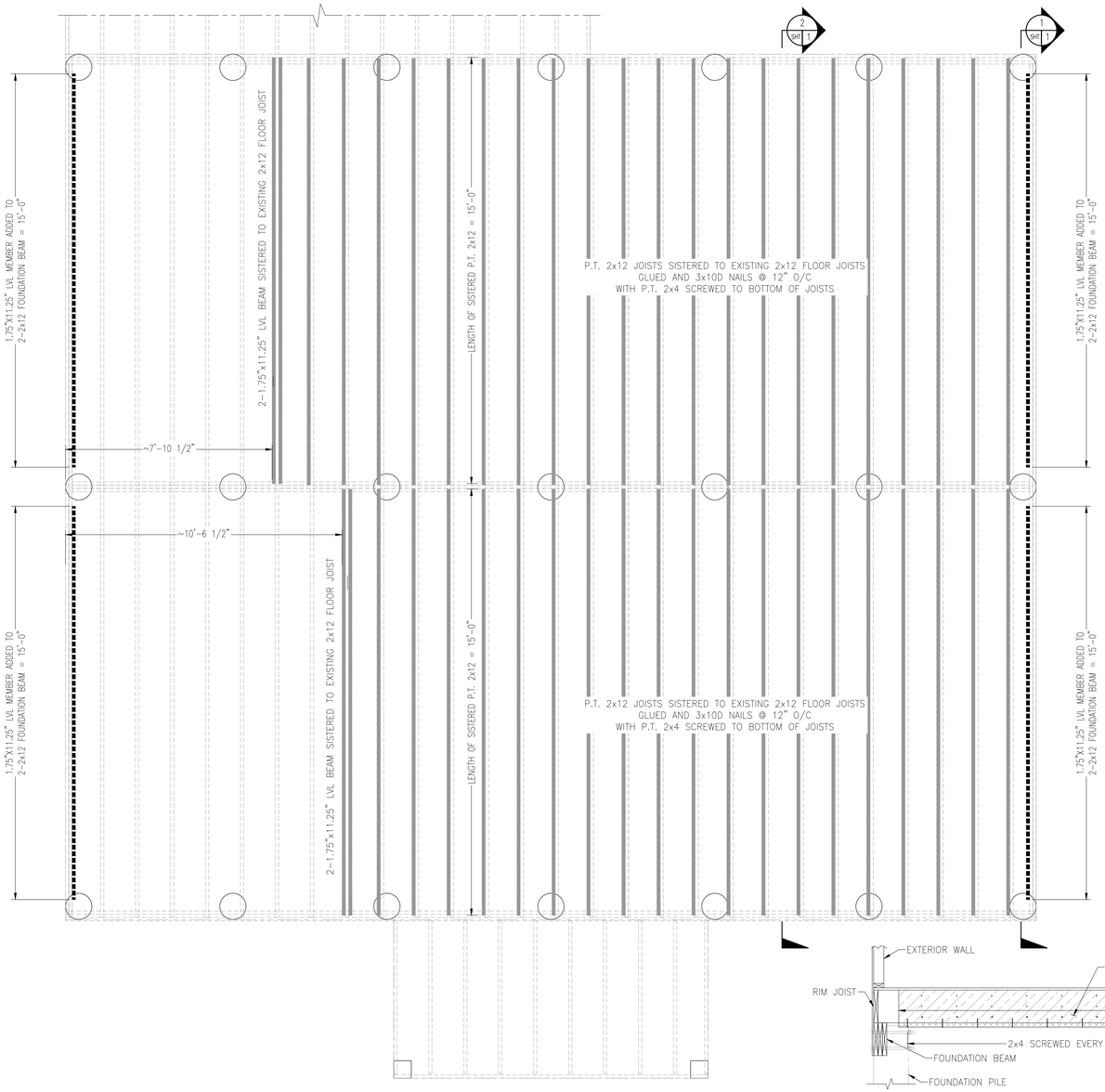

FIRST FLOOR FRAMING REPAIR PLAN
SCALE: 3/8"=1'-0"

BILL OF MATERIALS

ITEM	QTY	DESCRIPTION	SIZE	MATERIAL	NOTES
1	8	LVL, GRADE 2.0E – 16FT LONG	1.75"x11.25"	LAMINATED VENEER LUMBER (LVL) (MIN FLEXURAL STRESS = 2,600PSI MIN MOD. OF ELASTICITY = 2.0x10^6PSI)	CUT TO 15FT LONG
2	40	P.T 2x12 – 16FT LONG	1.5"x11.25"	PRESSURE TREATED SOUTHERN YELLOW PINE #2 OR BETTER	CUT TO 15FT LONG
3	40	P.T. 2x4 – 16FT LONG	1.5"x3.5"	PRESSURE TREATED SOUTHERN YELLOW PINE #2 OR BETTER	CUT TO 15FT LONG
4	~2200	NAILS	10D	STEEL	
5	1600	STRUCTURAL SCREW	SDWS16300	STEEL	STRONG DRIVE SDWS FRAMING SCREW
6	70	CONSTRUCTION ADHESIVE	28OZ CARTRIDGE	POLYURETHANE BASED ADHESIVE	30 TUBES

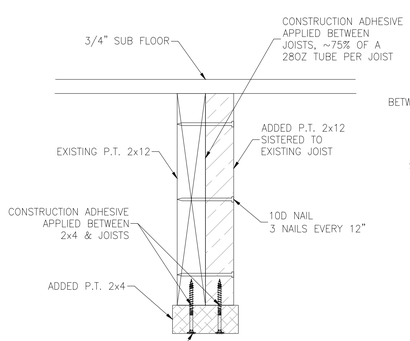

SECTION 5 SHT 1
SCALE: 1"=1'-0"
SECTION THRU SISTERED FLOOR JOIST
SEE GENERAL NOTES

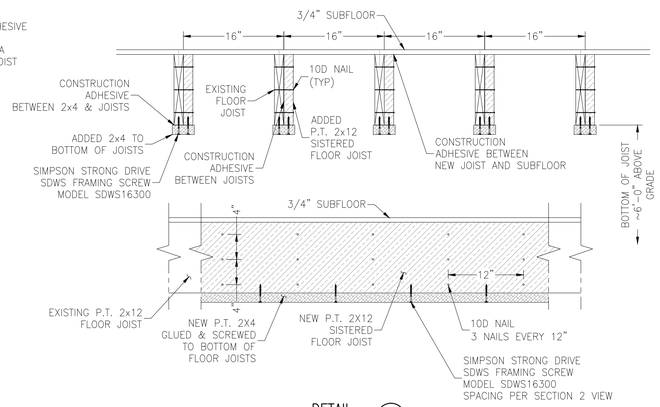

DETAIL 4 SHT 1
SCALE: 1"=1'-0"
TYPICAL FLOOR JOIST SISTER DETAILS
SEE GENERAL NOTES

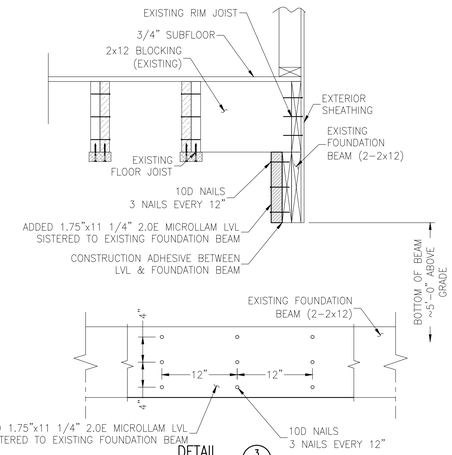

DETAIL 3 SHT 1
SCALE: 1/2"=1'-0"
TYPICAL FLOOR JOIST SISTER DETAILS
SEE GENERAL NOTES

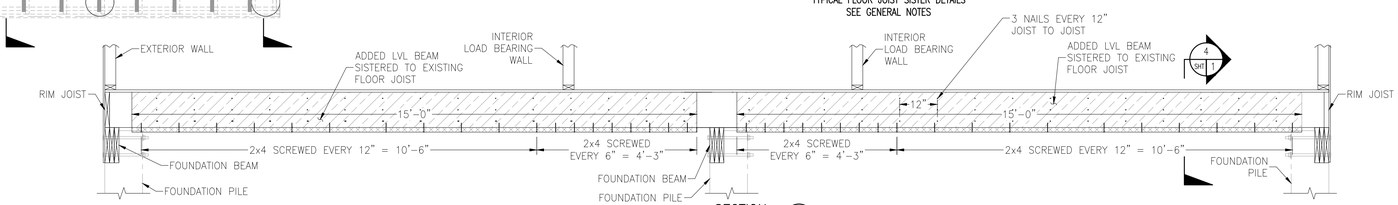

SECTION 2 SHT 1
SCALE: 1/2"=1'-0"
TYPICAL FLOOR JOIST SISTER DETAILS

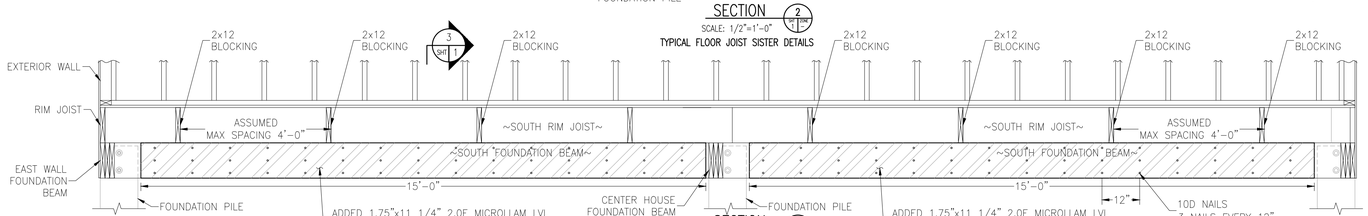

SECTION 1 SHT 1
SCALE: 1/2"=1'-0"
NORTH AND SOUTH EXTERIOR WALL FOUNDATION BEAM REPAIR DETAILS

General Notes

REPAIRS SHOWN BRING THE FIRST FLOOR FRAMING MEMBERS AND FOUNDATION BEAMS IN TO COMPLIANCE WITH FOLLOWING CODES;

1) INTERNATIONAL RESIDENTIAL CODE, 2012
2) WOOD FRAME CONSTRUCTION MANUAL FOR ONE- AND TWO-FAMILY DWELLINGS, 2012
3) NATIONAL DESIGN SPECIFICATIONS OF WOOD CONSTRUCTION, 2015
4) INTERNATIONAL RESIDENTIAL CODE FOR ONE- AND TWO-FAMILY DWELLINGS, 2012
5) 7-10 MINIMUM DESIGN LOADS FOR BUILDING AND OTHER STRUCTURES.

SISTERED FLOOR JOISTS CAN BE INSTALLED ON EITHER SIDE OF THE EXISTING FLOOR JOIST IN THE EVENT OF PIPING OR ELECTRICAL INTERFERENCES. IF INTERFERENCES EXIST ON BOTH SIDES OF THE EXISTING FLOOR JOIST, CONSULT THE ENGINEER.

ALL NAILS USED SHALL BE 10D OR LARGER, FRAMING NAILS

CONSTRUCTION ADHESIVE SHALL BE USED WHERE SHOWN IN ACCORDANCE WITH THE MANUFACTURES RECOMMENDATION.

AVOID THE USE OF FLOOR JOISTS WITH EXCESSIVE CROWNING OR BOWING. ANY JOIST WITH CROWING IN EXCESS OF 1/2" SHOULD BE DISCARDED AND REPLACED PRIOR TO INSTALLATION. IF USING FLOOR JOISTS WITH CROWN, CARE SHALL BE TAKEN TO NOT FORCE THE FLOOR JOIST INTO THE SUBFLOOR TO AVOID DAMAGING THE FLOORING ABOVE THE SUBFLOOR.

REMOVE ALL FLOOR INSULATION PRIOR TO START OF REPAIRS. INSULATION SHOULD BE SAVED AND STORED IN A DRY LOCATION FOR REINSTALLATION AFTER REPAIRS ARE COMPLETED. EXTERIOR SIDING NEEDED TO BE REMOVED ON THE NORTH AND SOUTH WALLS SHALL BE SAVED AND STORED FOR REINSTALLATION AFTER REPAIRS ARE COMPLETED. REINSTALL ALL INSULATION AND EXTERIOR SIDING AFTER REPAIRS ARE COMPLETED.

STATE OF LOUISIANA
MICHAEL R. WOOD
License No. 36377
PROFESSIONAL ENGINEER
Mike Wood
2022.10.13
09:03:57-05'00'

No.	Revision/Issue	Date

Project Name and Address
6219-6221 VERMILLION DRIVE
NEW ORLEANS, LA 70122

DRAWING TITLE
FOUNDATION REPAIR PLAN

Date	Drawn By
10/13/22, REV 0	MIKE WOOD, PE
Scale: AS NOTED	Sheet: 1 OF 1