Supreme Gutters and Patios

P.O. BOX 3076
Slidell
70459
15043765638
supreme@supremegpservices.com

INVOICE
INV1006

DATE
Aug 12, 2022

DUE
On Receipt

BALANCE DUE
USD $69,433.00

BILL TO

LLC de Bienville

620 Julia St
New Orleans, LA 70130
(504) 901-3796
nicolasboulier@yahoo.fr

DESCRIPTION	RATE	QTY	AMOUNT
Roof Replacement Dwelling Roof 3 Velux type 2270 curb side 22 1/2 x 70 W temp high E3 glass ~~3 Velux type 2246 curb side 22 1/2 x 46 W temp high E3 glass~~ No skylights on Julia St side All framed added and furnished in treated wood Sistering of framing only. No removal of existing framing 20Sq- Included Tear Off Haul and Dispose Of Comp Shingles Roofing Felt - Included Starters - Included Shingles - Included Per HDLC list of approved roof brands and colors, attached Ridge Cap - Included Roof Vent - Included Furnace Vent - Included Roofing slats 3x1 wood painted white TMKO HRTG30 SHADOW GREY Including Materials & Labor	$26,500.00	1	$26,500.00
Permit Fee	$533.00	1	$533.00

DESCRIPTION	RATE	QTY	AMOUNT
Stucco Stucco exterior of building (Damaged area) Only where stucco is existing, per formula attached Massonry Area Cleaning all walls height pression No aggressive Pressure wash Back of main building only repairing missing bricks New bricks to match existing in size, shape, and color. All materials and labor included	$11,500.00	1	$11,500.00
Rear Balcony Repair and install balcony Flooring and Hand railing 12 Vertical Columns Paint (white) Joists need to be screwed and glue on Flooring only for 3rd floor in the same slats as second story 3inches wood Hand railing wood paint white All fascia in wood painted white 4x8 wood Underflooring balcony #2 and under roof board inn3 inches slates parallel to house All materials and labor included	$19,000.00	1	$19,000.00
Front Balcony Repair of Balcony Replace all wood fasica and soffit Paint (white)/black replace Cornice Cornice details to match previously existing, see photos attached Paint top of house white customer is supplying paint for wood HDLC COLOR 50ft machine All materials and labor included	$7,700.00	1	$7,700.00

HISTORIC DISTRICT LANDMARKS COMMISSION
10-19
wcargile
22
APPROVED

DESCRIPTION	RATE	QTY	AMOUNT
Gutters Installation Gutter Installation Downspout at front to match existing Bronze Half Round 35ft 1 downspout Demo old gutters Gutters In back K Style white Downspout 6" aluminum hanger 1"1/2 strong tie screws 1/8 colors rivet 1/4 zip screws Elbows Water proof caulking Go To Spectrametals.com Click On Color Visualizer/Top Right Hand corner Scroll Down To Gutter Color Visualizer Click On Learn More Choose A Color From The List	$4,200.00	1	$4,200.00

TOTAL	$69,433.00
BALANCE DUE	**USD $69,433.00**

Payment Inf

HISTORIC DISTRICT LANDMARKS COMMISSION 10-19 wcargile 22 APPROVED

OTHER

If you have any questions please give me a call. I added all quotes to this invoice.

IF YOU AGREE TO GO WITH US! THIS SERVES AS YOUR BONDING CONTRACT. HALF PAYMENT IS DUE WHEN THE CONTRACT IS SIGNED TO ORDER YOUR MATERIALS, AND YOUR REMAINING BALANCE IS DUE UPON COMPLETION OF YOUR JOB!! ANY OUTSTANDING BALANCES AFTER COMPLETION OF YOUR PROJECT WILL ACCRUE A 10% INTEREST CHARGE PLUS AN ADDITIONAL $25 DOLLARS PER DAY STARTING THE FOLLOWING DAY AFTER COMPLETION!!! SUPREME GUTTERS & PATIOS NOW OFFERS FINANCING, HOWEVER, YOU AS THE CUSTOMER WILL STILL BE RESPONSIBLE FOR HALF DOWN UPFRONT & THE FINAL PAYMENT AT THE END OF THE JOB, OR WE CAN WAIT FOR YOUR FUNDS TO BE DEPOSITED, AND THEN WE CAN MOVE FORWARD WITH YOUR PROJECT

Supreme Gutters & Patios
P.O. Box 3076
Slidell, LA 70459
(504) 376-5638

HISTORIC DISTRICT LANDMARKS COMMISSION
10-19
wcargile
22
APPROVED

MASONRY: 618 JULIA ST

In the Garconniere:

Cleaning all walls with Hight pression

Fixing all bricks everywhere it's missing STRUCTURALLY like outside and above the windows or doors by placing a reinforcing lintel before. For 4 windows/doors. All work to match existing. New bricks to match existing in size, shape, and color.

Fixing all bricks, if necessary, INSIDE where new soffits will be put

Stucco outside by following the HDLC prescriptions. See attached and see surface above. New stucco to replace existing only. Exposed brick to remain

In the main building backyard:

Fixing only structural bricks missing everywhere outside. (No stucco) or around the windows.
All work to match existing. New bricks to match existing in size, shape, and color.

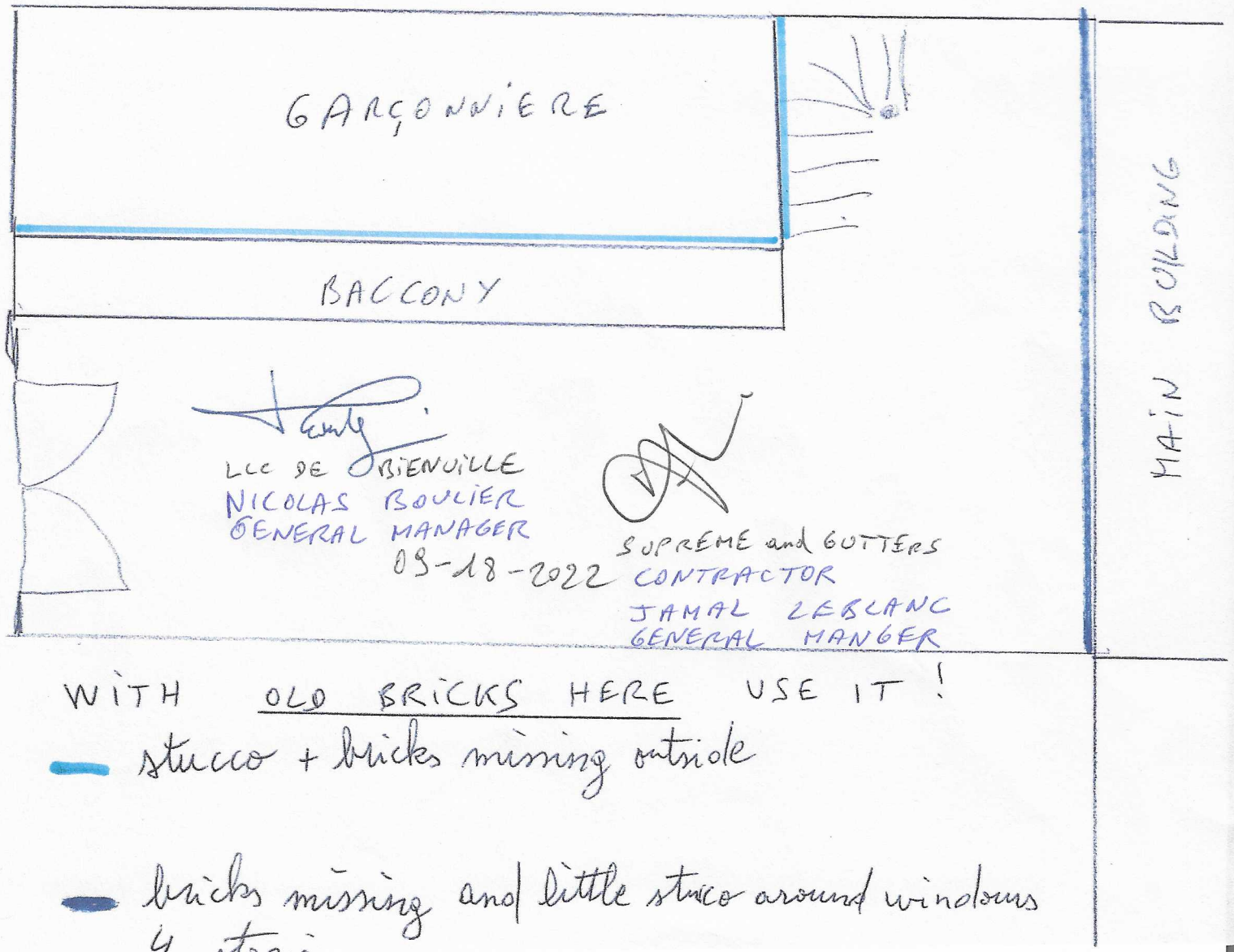

REAR: BALCONYS

-joist

follow the prescription of the engineer. Means 18 joist must be screw and glue on their extremity with new peace.

-flooring only for third floor in the same planks than the second stories existing means wood 3 inches perpendicular to the façade.

-hand railings like the picture below and in wood paint in white.12 vertical columns is necessary new wood columns to match photo below.

FASCIA TRTD 4X8 WOOD

NO board under the flooring of the first balcony.

UNDERFLLORING balcony number 2 and under roof, board in 3 inches slates parallel to the façade.

ALL IN TREATED WOOD

Contractor: SUPREME & GUTTERS

Landlord: LLC DE BIENVILLE

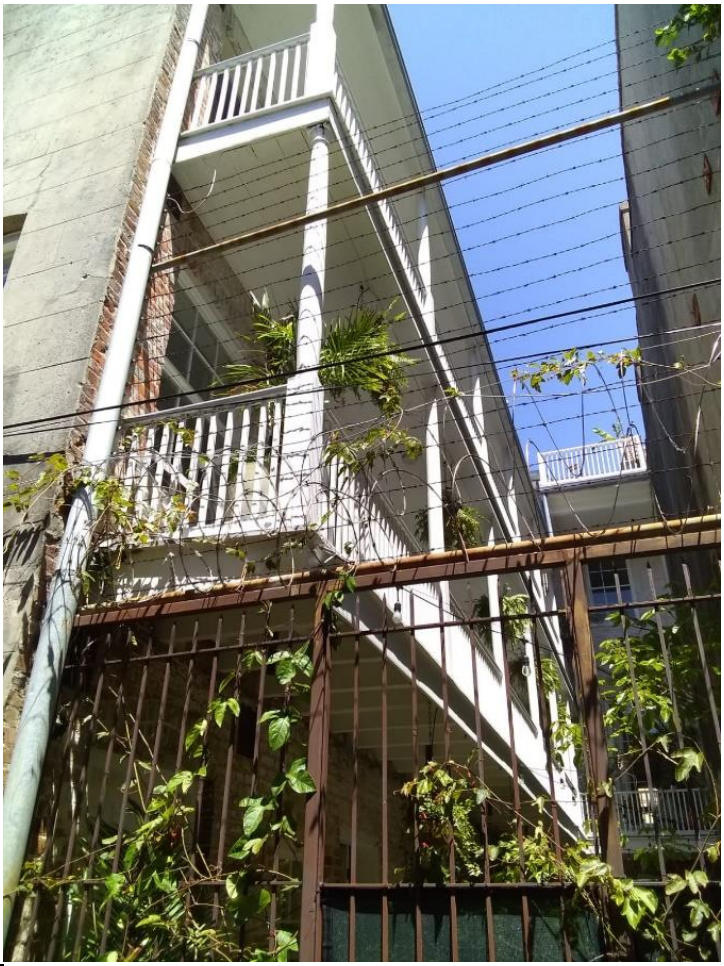

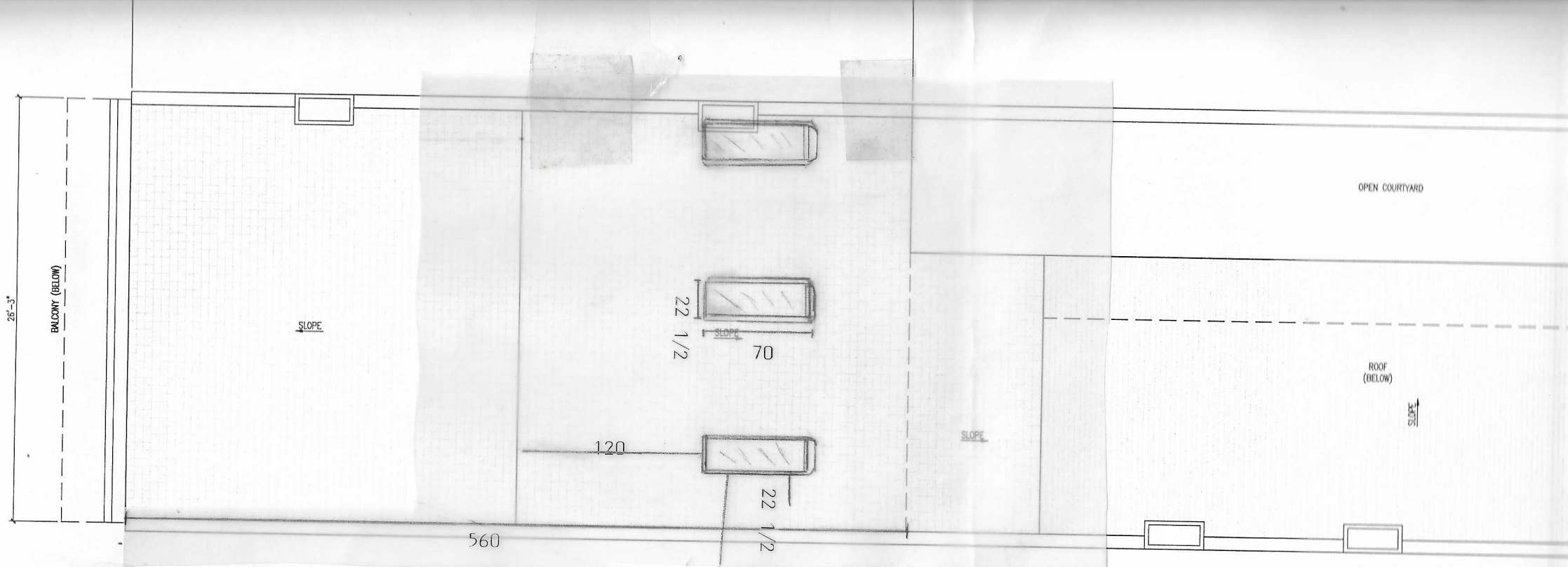

Installation of **fixed** skylight type VELUX
charcoal gray color
22-1/2x70 back roof
~~22-1/2x45-3/4 front roof~~

HISTORIC DISTRICT LANDMARKS COMMISSION
10-19
wcargile
22
APPROVED

SUPREME GUTERS & PATIO
General contractor
3725 Canal Bank DR
70461 SLIDELL
LOUISIANA

PROJECT PHASE:

Permit

new roof and skylights.
(no structural)

POJECT NAME :

FUTUR conditions

SHEET TITLE:

ROOF PLAN
618/620 Julia street
70130 NEW ORLEANS
LOUISIANA

OWNER

LLC DE BIENVILLE
2614 BANKS street
70119 NEW ORLEANS

HDLC PRE- APPROVED ROOFING BRANDS & COLORS updated September, 202

By the Way, Did You Know?

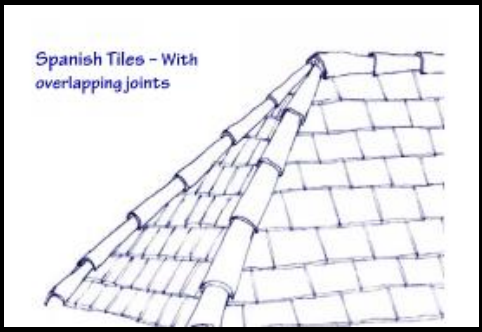

Existing ridge tiles should be salvaged and reinstalled!

The HDLC does NOT approve wind turbines. The HDLC does approve Chinese Cap and Low Profile Power Vents!

Atlas

Atlas Stormmaster Shake
Black Shadow, Heathstone Grey, Pewter, Weathered Wood
Atlas Pinnacle Pristine
Pristine Black, Pristine Hearthstone, Pristine Pewter, Pristine Weathered wood

Certainteed

Certainteed – Landmark
Colonial Slate, Georgetown Grey, Max Def Georgian Grey, Max Def Maine Black, Moire Block, Weathered Wood
Certainteed Landmark IR
Colonial Slate, Cumberland, Moire Black, Weathered Wood
Certainteed Landmark Premium
Max Def Moire Black
Certainteed Landmark Pro
Max Def Colonial Slate, Max Def Georgetown, Max Def Moire
Certainteed Landmark TL
Max Def Colonial Slate, Max Def Moire Black, Max Def Old Overton
Certainteed Grand Manor
Black Pearl, Colonial Slate, Gatehouse Slate, Stonegate Grey
Certainteed Climateflex
Colonial Slate, Weathered Wood, Moire Black

BP

Everest 42
Silver Grey, Fossil Wood, Twilight Grey, Brownstone, Driftwood
Vanguard – Class IV
Twilight Grey, Shadow Black, Silver Grey

GAF

GAF – Timberline UHD
Slate, Pewter Gray,Charcoal, Weathered Wood
GAF- Timberline HDZ
Pewter Grey, Charcoal, Oyster Gray, Weathered wood
GAF – Timberline – NS
Charcoal, Weathered Wood, Slate, Pewter Grey
GAF – Timberline – AS II
Charcoal, Slate, Weathered Wood, Pewter Grey
GAF – CS
Antique Slate, Weathered Wood

IKO

Cambridge Collection
Dual Black, Dual Grey, Weathered Wood, Harvard Slate, Charcoal Grey
Cambridge Natural Cool
Dual Gray
Cambridge Cool Plus
Harvard Slate, Graphite Black
Dynasty
Castle Grey, Glacier, Granite Black

Malarkey

Legacy/Legacy Scotchguard/Highlander NEX AR/Vista AR
Midnight Black, Black Oak, Weathered Wood, Storm Grey

Owens Corning

Owens Corning – Oakridge
Driftwood, Estate Gray, Flagstone, Onyx Black, Peppermill, Twilight Black
Owens Corning –Duration
Driftwood, Estate Grey, Onyx Black, Quarry Grey
Owens Corning – Duration Flex
Estate Grey, Onyx Black, Driftwood,
Owens Corning – Berkshire Collection
Canterbury Black, Colonial, Concord, Manchester Grey

Tamko

Tamko Heritage Woodgate
Antique Wood, Weathered Wood, Black Sage
Tamko Titan
Rustic Black, Virginia Slate, Weathered Wood
Tamko Stormfighter
Weathered Wood, Rustic Black
Tamko Heritage
Antique Slate, Oxford Grey, Weathered Wood, Rustic Black, Shadow grey, Virginia Slate

HDLC + VCC

APPROVED MORTAR FORMULA

MORTAR

1 part Portand Cement
3 parts lime
9 parts sand
enough water to form a workable mix

STUCCO

base coat - consists of 2 coats for 5/8" total thickness
1 part Portland Cement
3 parts lime
9 parts sand
6 lbs./cubic yard hair or fiber
enough water to form a workable mix

finish coat – ¼" total thickness
1 part Portland Cement
3 parts lime
9 parts sand
enough water to form a workable mix

HDLC wood handrail detail

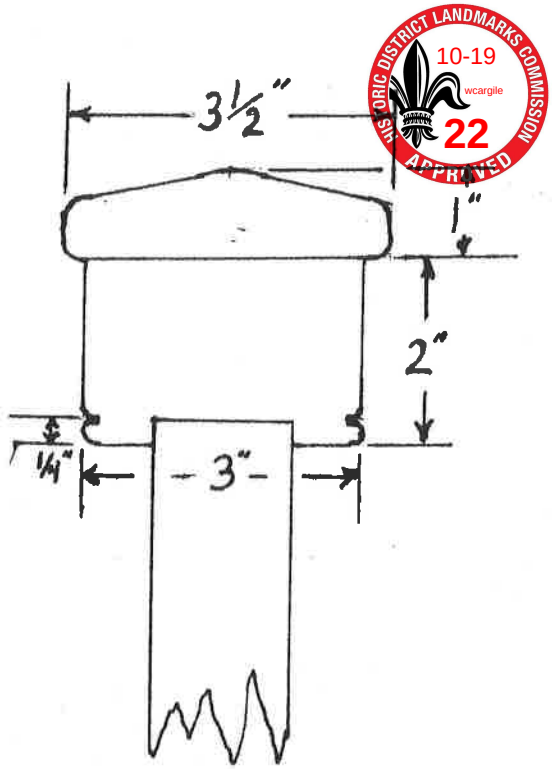

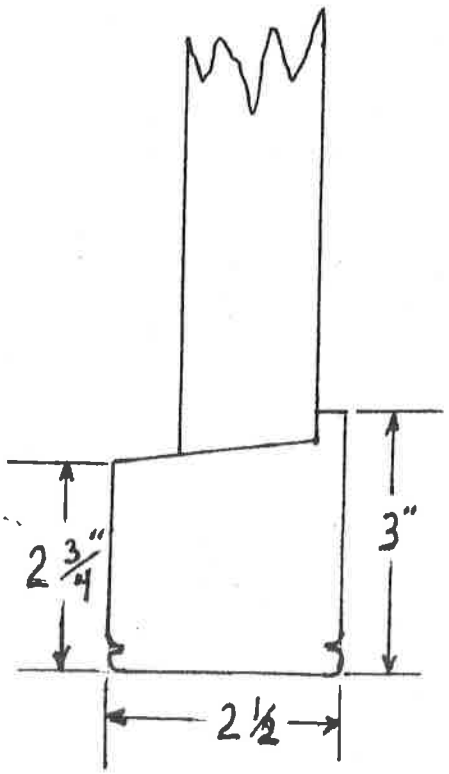

HISTORIC DISTRICT LANDMARKS COMMISSION
10-19
wcargile
22
APPROVED
Boxed out fascia should be the same size as neighboring building, per previous existing condition
Dentil detailing to be reinstalled

Oct 19, 2022 at 12:19:26 PM

Replacement cornice needs to be corrected to match previously existing condition in previous photo.

Elements should align

Dentil detailing to be reinstalled in wood

HISTORIC DISTRICT LANDMARKS COMMISSION
10-19
wcargile
22
APPROVED