01. GENERAL NOTES

A. AS REQUIRED BY THE SPECIFICATIONS, ALL WORK SHALL BE IN COMPLIANCE WITH APPLICABLE BUILDING CODES.

B. MEANS AND METHODS:
   1. THE CONSTRUCTION AND/OR PERMIT DOCUMENTS REPRESENT A GENERAL OVERVIEW OF THE CONSTRUCTION WORK AND CONTAIN VARIOUS DETAIL DRAWINGS IN SUPPORT OF MEANS AND METHODS. THE CONSTRUCTION DOCUMENTS DO NOT REPRESENT EXHAUSTIVE INFORMATION DEPICTING ALL ASPECTS OF GENERALLY ACCEPTED INDUSTRY STANDARDS AND/OR CODE REQUIREMENTS. THE CONTRACT DRAWINGS DO NOT DESCRIBE ALL MEANS, METHODS AND COMPONENTS TO COMPLETE THE CONTRACT WORK. VARIOUS ASPECTS OF INSTALLATIONS AND ASSEMBLIES ARE ALSO AS REQUIRED AND DIRECTED BY EACH MANUFACTURERS UNIQUE PRODUCTS. THESE REQUIREMENTS MAY BE PERFORMANCE ESTABLISHED, CODE ESTABLISHED OR BOTH. ITEMS, ASSEMBLIES, COMPONENTS, MEANS AND METHODS REQUIRED TO SUPPLY AND INSTALL THE WORK AS REQUIRED BY THE CONSTRUCTION DOCUMENTS (DRAWINGS, SPECIFICATIONS AND CONSTRUCTION CONTRACT) ARE CONSIDERED TO BE INCLUDED IN THE SCOPE OF CONTRACT WORK.

C. DIMENSIONS:
   1. CHECK DIMENSIONS ON THESE DRAWINGS AGAINST DIMENSIONS ON SITE AND ON ARCHITECTURAL DRAWINGS BEFORE USING THEM FOR FABRICATION OR CONSTRUCTION. REPORT DISCREPANCIES IMMEDIATELY UPON DISCOVERY. DRAWINGS HAVE BEEN DRAWN REASONABLY TO SCALE BUT THE CONTRACTOR MUST NOT SCALE THE DRAWINGS. CONFIRM EXISTING BUILDING LOCATION AND TIE-IN POINTS PRIOR TO CONSTRUCTION.

D. DISCREPANCIES:
   1. DISCREPANCIES, CONFLICTS OR PERCEIVED OMISSIONS FOUND IN THE CONSTRUCTION DOCUMENTS SHALL BE BROUGHT TO THE ATTENTION OF THE ARCHITECT AND THE OWNER FOR CLARIFICATION PRIOR TO PROCEEDING WITH THE WORK. FOR ANY DISCREPANCIES FOUND IN THE CONTRACT DOCUMENT & NOT BROUGHT TO THE ATTENTION OF THE A/E, IT SHALL BE ASSUMED THAT THE CONTRACTOR HAS INCLUDED IN THE PRICE, THE MOST EXPENSIVE WAY TO COMPLETE THE WORK.
   2. WORK NOT INDICATED ON A PART OF THE DRAWINGS BUT REASONABLY IMPLIED TO BE SIMILAR TO THAT SHOWN AT CORRESPONDING PLACES SHALL BE REPEATED.

E. EXISTING CONDITIONS:
   1. ALL DIMENSIONS FOR EXISTING CONDITIONS ARE TO BE VERIFIED IN FIELD (V.I.F.) BY THE CONTRACTOR. THE CONTRACTOR SHALL VERIFY ALL EXISTING CONDITIONS ON THE JOB SITE AND NOTIFY THE OWNER AND ARCHITECT OF DEVIATIONS FROM THE SCOPE OF WORK PRIOR TO THE INSTALLATION. ANY DISCREPANCIES IN DIMENSIONS OR SPECIAL MODIFICATIONS REQUIRED DUE TO FIELD CONDITIONS SHALL BE REPORTED IN WRITING TO THE OWNER AND ARCHITECT FOR CLARIFICATION, APPROVAL, OR MODIFICATION PRIOR TO COMMENCEMENT OF WORK INVOLVED. THE RESPONSIBILITY FOR ANY CHANGES IN THE FIELD WITHOUT PRIOR NOTIFICATIONS TO THE OWNER SHALL REST WITH THE CONTRACTOR OR ANY PERSON APPROVING SUCH CHANGE.

02. FOUNDATIONS

A. FOUNDATION NOTES
   1. FOUNDATIONS SHALL BE DESIGNED FOR 800 PSF STATIC BEARING CAPACITY OF SPREAD AND MAT FOOTINGS, BASED ON SOIL MAPS
   2. CONTRACTOR MUST LOCATE ALL UTILITY LINES ABOVE & BELOW GRADE, CONTACT ALL APPROPRIATE PARTIES & AGENCIES, RECEIVE PROPER AUTHORIZATION FROM SAID PARITIES & AGENCIES, AND SHALL BE FAMILIAR WITH THE SUBSURFACE CONDITIONS BEFORE COMMENCING EXCAVATION.
   3. DOWELS FROM FOOTINGS INTO PIERS AND WALLS ABOVE SHALL BE THE SAME SIZE AND NUMBER AS VERTICAL REBAR IN PIERS AND WALLS, AND SHALL BE EXTENDED INTO FOOTINGS, PIERS, & WALLS UNLESS OTHERWISE SHOWN.
   4. POUR DOWN BOTTOM OF WALLS AND PIERS TO TOP OF FOOTINGS & GRADE BEAMS TO OBTAIN FULL EXTENT OF CONTACT, UNLESS OTHERWISE SHOWN.
   5. CENTERLINE OF FOOTINGS SHALL BE CENTERLINE OF WALLS, PIERS AND COLUMNS, UNLESS OTHERWISE SHOWN.
   6. NO BACKFILLING SHALL BE DONE AGAINST FOUNDATION AND RETAINING WALLS UNTIL CONCRETE HAS ATTAINED AT LEAST 75% OF ITS DESIGN STRENGTH. BEFORE BACKFILLING, PROVIDE BRACING FOR WALLS SUSTAINING MORE THAN 3 FEET OF EARTH PRESSURE. THIS BRACING SHALL REMAIN IN PLACE UNTIL ALL SLABS AND BEAMS FRAMING INTO WALL HAVE BEEN PLACED AND SET.
   7. IN NO CASE SHALL BULLDOZERS OR OTHER HEAVY EQUIPMENT BE PERMITTED CLOSER THAN 5 FEET FROM ANY FOUNDATION WALL. IF IT IS NECESSARY TO OPERATE SUCH EQUIPMENT CLOSER THAN 8 FEET TO THE WALL, THE CONTRACTOR SHALL BE THE SOLE RESPONSIBLE PARTY AND AT THEIR OWN EXPENSE SHALL PROVIDE ADEQUATE SUPPORTS OR BRACE THE WALL TO WITHSTAND THE ADDITIONAL LOADS SUPERIMPOSED FROM SUCH EQUIPMENT.
   8. CONTRACTOR SHALL BE RESPONSIBLE TO ADEQUATELY PROTECT ALL EXCAVATION SLOPES. WHERE NECESSARY, SHEETING AND SHORING OF EXCAVATION SHALL BE PROVIDED WITH ALL REQUIRED TIEBACKS AND BRACING.
   9. METHODS EMPLOYED IN ALL SHEETING AND SHORING SHALL BE DESIGNED BY A PROFESSIONAL ENGINEER LICENSED IN THE STATE OF LOUISIANA.
   10. MATERIAL FOR CONTROLLED FILL SHALL MEET THE FOLLOWING CRITERIA:
       a. SELECT EXCAVATED GRAVEL OR STONE MATERIALS FREE OF ORGANIC MATERIAL, LOAM, TRASH, SNOW, ICE, FROZEN SOIL, AND OTHER OBJECTIONABLE MATERIAL, CONFORMING TO THE GRADATION REQUIREMENTS AS FOLLOWS:
          - SIEVE SIZE % PASSING (BY WEIGHT)
          - 3-1/2" 100%
          - 3/4" 50-100%
          - #4 25-75%
          - THE FRACTION PASSING THE NO. 200 SIEVE SHALL BE LESS THAN 15% OF THE FRACTION PASSING THE NO. 4 SIEVE.
   11. ON-SITE EXCAVATED MATERIAL MAY ONLY BE SUITABLE FOR USE AS GRANULAR FILL IF IT CONFORMS TO THE SPECIFICATIONS NOTED AND IS APPROVED FOR USE BY THE GEOTECHNICAL ENGINEER. REFER TO GEOTECHNICAL REPORT FOR MORE INFORMATION.
   12. STRUCTURAL FILL MATERIAL SHOULD BE PLACED IN UNIFORM 12" THICK LOOSE LIFTS AND COMPACTED TO 95% OF ITS MAXIMUM DRY DENSITY, AT OPTIMUM MOISTURE CONTENT, IN ACCORDANCE WITH ASTM D1557-93. IN RESTRICTED AREAS WHERE ONLY HAND-OPERATED EQUIPMENT IS PERMITTED, THE MAXIMUM LOOSE LIFT SHALL BE 8".
   13. SOIL COMPACTION SHALL BE CONTROLLED BY A QUALIFIED TESTING LABORATORY OR GEOTECHNICAL ENGINEER. TAKE A MINIMUM OF ONE FIELD DENSITY TEST FOR EACH LAYER. LOCATION OF TEST SHALL BE DETERMINED BY THE TESTING AGENCY.

B. FORMWORK AND SHORING NOTES
   1. SHORES SHALL BE DESIGNED AND DETAILED BY A PROFESSIONAL ENGINEER LICENSED IN THE STATE OF LOUISIANA. DRAWINGS ILLUSTRATING THE SHORING SYSTEM AND SEQUENCING SHALL BE SIGNED AND SEALED BY SAID ENGINEER.
   2. DESIGN AND ERECT FORMS AND SHORES IN ACCORDANCE WITH ACI-347. DESIGN FORMS AND SHORES FOR HORIZONTAL CONCRETE MEMBERS FOR NOT LESS THAN DEAD LOAD PLUS 50 PSF CONSTRUCTION LOAD AND FOR THE CUMULATIVE LOADS OF SUPPORTING FLOOR SLABS. DESIGN SHORES WITH A MIN. FACTOR OF SAFETY OF 3.
   3. PROVIDE TEMPORARY BRACING AS NEEDED TO ENSURE STABILITY OF STRUCTURE DURING CONSTRUCTION.
   4. FORMING, SHORING AND RE-SHORING SHALL BE INSPECTED BY THE PROFESSIONAL ENGINEER WHO PREPARES THE SAID DRAWINGS. THEY SHALL SUBMIT A STATEMENT TO THE ENGINEER THAT THIS WORK WAS PERFORMED IN ACCORDANCE WITH PLANS AND SPECIFICATIONS.

04. POST INSTALLED ANCHORS

A. FOR CONCRETE CONSTRUCTION:
   1. EPOXY ANCHORS [EPA] SHALL BE - (FOR THR'D ROD & REBAR)
      a. HILTI HIT- RE500-V3
   2. EXPANSION ANCHORS [EXA] SHALL BE -
      a. HILTI KWIK-TZ PER
      b. SIMPSON STRONG-BOLT 2
   3. SCREW ANCHORS [SA] SHALL BE -
      a. HILTI KWIK HUS-EZ
      b. SIMPSON TITEN HD

B. FOR MASONRY CONSTRUCTION:
   1. EPOXY ANCHORS [EPA] SHALL BE - (FOR THRD'D ROD & REBAR)
      a. HILTI HIT-HY 270
   2. EXPANSION ANCHORS [EXA] SHALL BE -
      a. HILTI KWIK BOLT 3
      b. SIMPSON WEDGE-ALL
   3. SCREW ANCHORS [SA] SHALL BE -
      a. HILTI KWIK HUS-EZ
      b. SIMPSON TITEN HD

C. ANCHOR TYPE, SIZE & EMBEDMENT SHALL BE INDICATED IN DRAWINGS. POST-INSTALLED ANCHORS FOR REPAIR SHALL BE EVALUATED ON A CASE BY CASE BASIS. NOTIFY STRUCTURAL ENGINEER FOR REPAIRS.

D. ANCHORS SHALL BE INSTALLED IN ACCORDANCE WITH THE REQUIREMENTS GIVEN IN THE ICC REPORT.

E. UNLESS NOTED OTHERWISE ANCHORS HAVE BEEN DESIGNED FOR SPECIAL INSPECTION. PROVIDE SPECIAL INSPECTION AS INDICATED IN THE ICC REPORT.

F. WHEN INSTALLING DRILLED-IN ANCHORS IN EXISTING CONCRETE OR MASONRY, USE CARE AND CAUTION TO AVOID CUTTING OR DAMAGING EXISTING REINFORCING BARS. DO NOT INSTALL ANCHORS IN PRESTRESSED CONCRETE ELEMENTS.

G. ANCHORS INSTALLED FROM THE BOTTOM INTO METAL DECK WITH CONCRETE SHALL BE INSTALLED IN THE CENTER OF THE LOW FLUTE OF THE DECKING UNLESS NOTED OTHERWISE IN ICC REPORT. THE DECKING SHALL HAVE A MINIMUM THICKNESS OF 20 GAUGE. THE MINIMUM THICKNESS OF THE CONCRETE ABOVE THE HIGH FLUTE OF THE METAL DECK SHALL BE AS INDICATED IN THE ICC REPORT. SEE ICC REPORT FOR ADDITIONAL REQUIREMENTS, INCLUDING MINIMUM DIMENSIONS FOR FLUTE WIDTH AND DEPTH.

H. ADHESIVE ANCHORS SHALL BE INSTALLED IN CONCRETE HAVING A MINIMUM AGE OF 21 DAYS AT THE TIME OF ANCHOR INSTALLATION PER ACI 318, APPENDIX D.

I. INSTALLER CERTIFICATION AND INSPECTION IS REQUIRED FOR HORIZONTAL AND UPWARDLY INCLINED ADHESIVE ANCHORS SUBJECTED TO SUSTAINED TENSION LOADING IN ACCORDANCE WITH ACI 318, APPENDIX D.

J. THE INSPECTION OF THE ANCHORS SHALL BE DONE BY A QUALIFIED INSPECTION AGENCY AND A REPORT OF THE INSPECTION RESULTS SHALL BE SUBMITTED TO THE ARCHITECT/STRUCTURAL ENGINEER.

K. IN THE INSTALLATION OF ANCHORS, CARE SHALL BE EXERCISED SO AS NOT TO NICK OR CUT EXISTING REINFORCING, CONDUIT, ETC.

L. INSTALL ANCHORS AS PER THE MANUFACTURER'S INSTRUCTIONS, AS INCLUDED IN THE ANCHOR PACKAGING.

M. THE CONTRACTOR SHALL ARRANGE AN ANCHOR MANUFACTURE'S REPRESENTATIVE TO PROVIDE ONSITE INSTALLATION TRAINING FOR ALL OF THEIR ANCHORING PRODUCTS SPECIFIED. THE STRUCTURAL ENGINEER OF RECORD MUST RECEIVE DOCUMENTED CONFIRMATION THAT ALL OF THE CONTRACTOR'S PERSONNEL WHO INSTALL ANCHORS ARE TRAINED PRIOR TO THE COMMENCEMENT OF INSTALLING ANCHORS.

N. ANCHOR CAPACITY IS DEPENDANT UPON SPACING BETWEEN ADJACENT ANCHORS AND PROXIMITY OF ANCHORS TO EDGE OF CONCRETE. INSTALLATION OF ANCHORS SHALL BE IN ACCORDANCE WITH SPACING AND EDGE CLEARANCES INDICATED ON THE CONTRACT DRAWINGS.

O. DRILLING HOLES FOR ANCHORS AND CORING HOLES IN EXISTING CONCRETE:
   1. PRIOR TO DRILLING OR CORING HOLES, THE CONTRACTOR SHALL LOCATE EXISTING REINFORCING STEEL, POST-TENSIONING, CONDUIT, PIPING, ETC. IN THE AREA WHERE NEW HOLES ARE TO BE INSTALLED THROUGH NON-DESTRUCTIVE TESTING SUCH AS WITH AN X-RAY, RADAR, OR WITH OTHER NON- DESTRUCTIVE DEVICES.
   2. MARK THE LOCATION & EXTENTS OF ALL REINFORCING STEEL, POST-TENSIONING, CONDUIT, PIPING, AND OTHER EXISTING INTERFERENCES ON THE SURFACE OF THE SLAB.
   3. IF NEW HOLE LOCATIONS CONFLICT WITH EXISTING EMBEDDED ELEMENTS, THE CONTRACTOR SHALL NOTIFY THE ENGINEER BEFORE INSTALLING THE NEW HOLES.
   4. VERIFY NO CONFLICTS EXIST AT NEW HOLE LOCATIONS BY SMALL DRILLED PILOT HOLES. IF NO CONFLICTS EXIST, COMPLETE THE INSTALLATION. IN THE CASE OF STEEL TO BE FASTENED TO THE CONCRETE WITH MULTIPLE ANCHORS, FABRICATE, FROM A FIELD TEMPLATE, THE STEEL TO BE FASTENED TO THE CONCRETE BY THE ANCHORS AND COMPLETE THE INSTALLATION.
   5. WHEN INSTALLING NEW HOLES, CARE SHALL BE EXERCISED SO AS NOT TO NICK OR CUT EXISTING EMBEDDED ELEMENTS

05. CAST IN PLACE ANCHORS

A. ANCHOR BOLT MATERIAL SHALL BE ASTM F1554, GRADE 36 WITH UNC-2A THREADS U.N.O.

B. NUTS SHALL BE HEAVY HEX CONFORMING TO ASTM A563, GRADE A WITH UNC-2B THREADS.

C. WASHERS SHALL CONFORM TO ASTM F436.

D. THE FIT OF NUTS ON THREADS OF ANCHOR BOLTS SHALL BE VERIFIED BEFORE SHIPMENT.

E. THREAD LENGTH SHALL MATCH PROJECTION LENGTH U.N.O.

F. ANCHOR BOLTS SHALL CONSIST OF AN ANCHOR BOLT WITH A TACK WELDED NUT AT THE BOTTOM AND NUT(S) AND A WASHER AT TOP.

G. ANCHOR BOLTS SHALL BE CLEAN AND FREE OF ANY OILS OR OTHER FOREIGN MATERIALS PRIOR TO PLACEMENT

H. CONTRACTOR SHALL PREVENT CONCRETE FROM CONTACTING THE PROJECTING PART OF THE ANCHOR BOLT DURING CONCRETE PLACEMENT.

I. UNLESS OTHERWISE SPECIFIED, ANCHOR BOLTS SHALL BE TIGHTENED TO A SNUG-TIGHT CONDITION, DEFINED AS THE TIGHTNESS THAT IS

J. ATTAINED WITH A FEW IMPACTS OF AN IMPACT WRENCH OR WITH THE FULL EFFORT OF A MAN USING AN ORDINARY SPUD WRENCH.

06. STRUCTURAL STEEL:

A. A.I.S.C. SPECIFICATIONS; STEEL CONSTRUCTION MANUAL 14TH EDITION;

B. ALL WIDE FLANGE SHAPES ASTM A992 GRADE 50,

C. ALL MISCELLANEOUS SHAPES ASTM A36,

D. HSS SHAPES ASTM A500 GRADE B Fy=46 ksi,

E. STEEL PIPE ASTM A53 GRADE B Fy=35 ksi;

F. HIGH STRENGTH BOLTS A325, 3/4"ø MIN. EXCEPT AS NOTED OTHERWISE;

G. ANCHOR RODS AND BOLTS ASTM F1554 GRADE 36 EXCEPT AS NOTED OTHERWISE;

H. HEADED CONCRETE ANCHOR (H.C.A.) PER A.W.S. SPECIFICATION D1.1;

I. DEFORMED BAR ANCHOR (D.B.A.) ASTM A496; E-70 ELECTRODES.

J. ALL BEAM CONNECTIONS SHALL BE A.I.S.C. STANDARD FRAMED CONNECTIONS.

K. SHOP CONNECTIONS SHALL BE WELDED. FIELD CONNECTIONS SHALL BE BOLTED, EXCEPT CONNECTIONS TO EXISTING CONSTRUCTION SHALL BE WELDED.

L. CONNECTIONS NOT SCHEDULED OR DETAILED OTHERWISE TO BE DESIGNED FOR 1/2 UNIFORM LOAD BEAM CAPACITY FOR PROPER BEAM SPAN AND 2/3 UNIFORM LOAD BEAM CAPACITY FOR PROPER BEAM SPAN FOR COMPOSITE BEAMS.

M. ALL STRUCTURAL STEEL ITEMS AND RESPECTIVE ANCHORS AND FASTENERS PERMANENTLY EXPOSED TO WEATHER SHALL BE HOT DIPPED GALVANIZED AFTER FABRICATION IN ACCORDANCE WITH ASTM A123. PROVIDE VENT HOLES AS REQUIRED. TOUCH UP ALL DAMAGED COATING WITH HOT STICK GALVANIZING PER ASTM A780. SEE ARCHITECT FOR PAINTING.

07. CONCRETE MASONRY UNITS (CMU)

A. ALL MASONRY SHALL BE MANUFACTURED AND PLACED IN ACCORDANCE WITH ACI 530, "BUILDING CODE REQUIREMENTS FOR MASONRY STRUCTURES", AND ACI 530.1 "SPECIFICATION FOR MASONRY STRUCTURES".

B. MASONRY UNITS AND COMPONENTS THAT ARE DAMAGED ARE NOT TO BE INSTALLED IN THIS PROJECT. REINFORCEMENTS AND ACCESSORIES ARE NOT TO BE STORED ON THE GROUND AND ARE TO BE PROTECTED FROM PERMANENT DISTORTIONS.

C. WHEN THE AMBIENT AIR TEMPERATURE IS BELOW 40°F, THE COLD WEATHER PROCEDURES FROM ACI 530.1, ARTICLE 1.8C ARE TO BE IMPLEMENTED. WHEN THE AMBIENT AIR TEMPERATURE IS ABOVE 90° F, THE HOT WEATHER PROCEDURES FROM ACI 530.1, ARTICLE 1.8D ARE TO BE IMPLEMENTED.

D. CONCRETE BLOCK UNITS SHALL CONFORM TO ASTM C90 . F'M = 1500 PSI. F'M SHALL BE VERIFIED IN ACCORDANCE WITH SECTION 2105.2.2.1.2 OF THE IBC. CONCRETE BLOCK UNITS SHALL BE MEDIUM WEIGHT. ALL MASONRY CONSTRUCTION IS TO BE GROUTED SOLID.

E. MORTAR SHALL BE TYPE S PER ASTM C270.

F. GROUT SHALL BE PROPORTIONED TO ATTAIN A 28 DAY COMPRESSIVE STRENGTH OF 2000 PSI. NOT MORE THAN 5% OF THE PEA GRAVEL SHALL PASS THE NO. 8 SIEVE AND 100% SHALL PASS THE 3/8" SIEVE. WHEN REQUIRED, GROUT STRENGTH SHALL BE VERIFIED IN ACCORDANCE WITH SECTION 2105.2.2.1.2 OF THE IBC.

G. REINFORCING STEEL SHALL CONFORM TO ASTM A615 GRADE 60 FOR #4 AND LARGER, GRADE 40 FOR #3 AND SMALLER. REINFORCING STEEL THAT IS TO BE WELDED SHALL CONFORM TO ASTM A706. CONTRACTOR SHALL SUBMIT REBAR MILL CERTIFICATES.

H. VERTICAL REINFORCING SHALL CONSIST OF #5 BARS AT 48" ON CENTER, LOCATED AT CENTER OF UNIT, UNO. LOCATE BARS AT ALL CORNERS, WALL ENDS, INTERSECTIONS, JAMBS AND AT EACH SIDE OF A WALL JOINT. LOCATE BARS OR ADD ADDITIONAL BARS DIRECTLY UNDER FRAMING MEMBERS SUCH AS BEAMS, JOISTS, GIRDERS, AND TRUSSES WHERE CENTER TO CENTER SPACING OF FRAMING MEMBERS EXCEED 48" CC. DOWELS WITH STANDARD 90° HOOKS INTO THE FOUNDATION SHALL MATCH AND LAP VERTICAL REINFORCING, TYPICAL, UNLESS NOTED OTHERWISE.

I. INTERMEDIATE HORIZONTAL REINFORCING SHALL CONSIST OF #4 BARS AT 24" ON CENTER, LOCATED AT THE CENTER OF THE MASONRY WALL, UNO. LOCATE TWO (2) #5 HORIZONTAL BARS AT ALL ELEVATED FRAMING ASSEMBLIES, SUCH AS ROOFS, FLOORS, AND STAIRS. ALSO, LOCATE ONE #5 HORIZONTAL BAR AT TOPS OF PARAPETS, TOPS OF FREE-STANDING WALLS, AT THE BOTTOM OF ALL WALLS, AND ALIGNED WITH THE SLAB-ON-GRADE. PLACE A #5 BAR AT EACH FACE OF THE MASONRY WALL ABOVE AND BELOW ALL WALL OPENINGS, UNO. EXTEND THESE BARS A MINIMUM OF A LAP LENGTH PAST THE EDGE OF THE OPENING. WHERE EXTENSION CAN NOT BE ACHIEVED, BEND BARS UP OR DOWN FOR A DISTANCE EQUAL TO THE SPECIFIED LAP LENGTH.

J. PLACE ALL HORIZONTAL BARS IN BOND BEAM UNITS. WHEN 2 BARS ARE USED, STAGGER LAPS MINIMUM OF 5'-0".

K. MINIMUM REBAR CLEARANCE TO FACE SHELL IS ONE BAR DIAMETER OR 1/2", WHICHEVER IS GREATER. WHERE WALLS ARE EXPOSED TO EARTH OR WEATHER, A MINIMUM COVER FOR THE REINFORCING BARS OF 2" SHALL BE MAINTAINED.

L. BEFORE BLOCK IS PLACED ON CONCRETE, THOROUGHLY CLEAN CONCRETE OF ALL LATENT AND ALL LOOSE MATERIAL. ROUGHEN AS IN A CONCRETE CONSTRUCTION JOINT.

M. CONCRETE BLOCK MASONRY SHALL BE BUILT TO PRESERVE THE UNOBSTRUCTED VERTICAL CONTINUITY OF THE CELLS. ALL HEAD AND END JOINTS SHALL BE SOLIDLY FILLED WITH MORTAR FOR A DISTANCE IN FROM THE FACE OF THE WALL OR UNIT NOT LESS THAN THE THICKNESS OF THE LONGITUDINAL FACE SHELLS. BOND SHALL BE PROVIDED BY LAPPING SUCCESSIVE COURSES OR BY EQUIVALENT MECHANICAL ANCHORAGE.

N. VERTICAL CELLS SHALL HAVE VERTICAL ALIGNMENT SUFFICIENT TO MAINTAIN A CLEAR UNOBSTRUCTED CONTINUOUS VERTICAL CELL.

O. GROUT PLACEMENT SHALL CONFORM TO ACI 530.1 SECTION 3.5.

P. CLEAN OUT OPENINGS SHALL BE PROVIDED AT THE BOTTOMS OF ALL CELLS TO BE FILLED AT EACH LIFT OR POUR OF GROUT WHERE SUCH LIFT OR POUR OF GROUT IS IN EXCESS OF 5'-4" IN HEIGHT, IN ACCORDANCE WITH ACI 530.1 SECTION 3.2F. ANY OVERHANGING MORTAR OR OTHER OBSTRUCTION OR DEBRIS SHALL BE REMOVED FROM INSIDE OF SUCH CELLS. THE CLEAN OUTS SHALL BE SEALED AFTER INSPECTION AND BEFORE GROUTING. MECHANICALLY VIBRATE ALL GROUT POURS.

Q. VERTICAL REINFORCING SHALL BE HELD IN POSITION AT TOP AND BOTTOM AND AT INTERVALS NOT TO EXCEED 192 BAR DIAMETERS.

R. THOROUGHLY CLEAN ALL CELLS AND BOND BEAMS OF MORTAR BEFORE GROUTING.

S. ALL CELLS SHALL BE FILLED SOLIDLY WITH GROUT. ALL GROUTING SHALL BE DONE UNDER THE OBSERVATION OF A QUALIFIED INSPECTOR WHERE INDICATED ON PLANS. REFER TO SPECIAL STRUCTURAL INSPECTION SECTION OF THESE NOTES FOR FREQUENCY OF GROUTING INSPECTION.

T. WHEN GROUTING IS STOPPED FOR ONE HOUR OR LONGER, HORIZONTAL CONSTRUCTION JOINTS, OR KEYS, SHALL BE FORMED BY STOPPING THE POUR OF GROUT 1-1/2" BELOW THE TOP OF THE UPPERMOST UNIT.

U. EVERY VERTICAL BAR IN WALLS SHALL BE LAPPED PER THE TABLE BELOW WITH A DOWEL OF THE SAME SIZE EXTENDING FROM THE FOUNDATION. LOCATE VERTICAL REINFORCING AT CENTERLINE OF WALL UNLESS SHOWN OR NOTED OTHERWISE. CARRY EACH DOWEL TO WITHIN 3" OF THE BOTTOM OF THE FOUNDATION AND TERMINATE WITH 90 DEGREE HOOK. DOWELS SHALL BE STRAIGHT AND PLUMB.

V. ALL EMBEDDED ITEMS (BOLTS, STRAPS, ETC.) SHALL BE SECURED IN PLACE PRIOR TO GROUTING. CUT A HOLE IN THE FACE SHELL TO ATTAIN A MINIMUM OF 1/2" GROUT ALL AROUND EMBEDDED ITEMS AT THE FACE SHELL. WITHIN THE CELL OF THE UNIT, PROVIDE A MINIMUM OF 8" OF GROUT AROUND EMBEDDED ITEMS. AT HORIZONTAL ANCHOR INSTALLATIONS, MAINTAIN A MINIMUM CLEAR DISTANCE OF 1/2" BETWEEN END OF ANCHOR AND FACE SHELL OF UNIT.

W. SINGLE CONDUITS (3/4" MAX) MAY BE PLACED IN VERTICAL CELLS NOT CONTAINING VERTICAL. REBAR. NO HORIZONTAL CONDUITS ALLOWED IN WALL CONSTRUCTION.

X. ANCHOR BOLTS CAST IN MASONRY SHALL BE HEADED BOLTS WITH CUT THREADS CONFORMING TO ASTM F1554 GRADE 36, OR ASTM A307 GRADE A, UNO. BENT BAR ANCHOR BOLTS ARE NOT PERMITTED.

Y. USE OPEN END BLOCK FOR ALL CONSTRUCTION NOT LAID IN RUNNING BOND.

Z. ALL REBAR SHALL BE LAP SPLICED AND DEVELOPED AS FOLLOWS (UNO). WHERE EPOXY COATED REBAR IS USED, MULTIPLY LAP LENGTHS BY 1.5. BARS LARGER THAN #8 ARE TO BE LAPPED WITH MECHANICAL SPLICES THAT DEVELOP AT LEAST 125 PERCENT OF THE YIELD STRENGTH OF THE BAR.

08. WOOD FRAMING

A. LUMBER AND ITS FASTENINGS SHALL CONFORM TO THE "NATIONAL DESIGN SPECIFICATIONS OF STRESS - GRADE LUMBER AND ITS FASTENINGS" (LATEST EDITION) AS RECOMMENDED BY THE NATIONAL FOREST PRODUCTS ASSOCIATION.

B. MATERIALS FOR EXTERIOR WALLS, LOAD BEARING WALLS, AND SHEAR WALLS SHALL BE A MINIMUM OF No.2 KILN DRIED SOUTHERN YELLOW PINE (SYP) OR DOUGLAS FIR LARCH (DFL) AND SHALL BE BORATE TREATED LUMBER WHERE NOTED OR EXPOSED TO EXTERIOR CONDITIONS

C. LUMBER FOR HEADERS, BEAMS, AND OTHER FRAMING MEMBERS SHALL BE No.2 SYP UNLESS NOTED OTHERWISE

D. LVL, PSL, GLAM, OR OTHER COMPOSITE FRAMING MEMBERS SHALL HAVE A MINIMUM Fb'=2,100 PSI.; E=2,000 KSI.

E. LOAD BEARING WALLS, INCLUDING SHEAR WALLS, CONSTRUCTED FROM FINGER JOINTED STUDS SHALL BE SHEATHED ON AT LEAST ONE FACE OR BRACED WITH 1X4 HORIZONTAL (CONT.) AT MID - HEIGHT OF WALL PRIOR TO LOADING THEM WITH CONSTRUCTION MATERIALS.

F. FINGER JOINTED STUDS SHALL EXCEED THE MATERIAL PROPERTIES AND ALLOWABLE STRESSES FOR SOLID LUMBER AS SPECIFIED FOR STUD GRADE CONSTRUCTION.

G. ALL OTHER NON-STRUCTURAL CONSTRUCTION SHALL BE EITHER CONSTRUCTION GRADE OR UTILITY HEADER AND OTHER MISCELLANEOUS FLEXURAL MEMBERS SHALL BE NO. 2 SYP (MC19 OR BETTER U.N.O.)

H. MATERIALS MUST BE GRADE MARKED.

I. SOLE PLATES IN CONTACT W/ CONCRETE SHALL BE PRESSURE TREATED LUMBER, 0.25 ACQ MINIMUM .

J. FOR OVERLAY FRAMING AT ROOFS OR OTHER CONVENTIONAL ROOF FRAMING, CONTRACTOR SHALL PROVIDE 2X FRAMING IN ACCORDANCE WITH ROOF RAFTER TABLES IN THE APPLICABLE BUILDING CODE.

K. BOLT HOLES THROUGH WOOD SHALL BE DRILLED 1/16" MAXIMUM LARGER THAN THE DIAMETER OF THE BOLTS TO BE INSTALLED.

L. BOLTS THROUGH WOOD SHALL BE FITTED WITH STANDARD WASHERS AT HEAD AND NUT ENDS.

M. FLITCH BEAMS WHEN SHOWN ON PLANS SHALL BE BOLTED TOGETHER WITH ONE 3/4" DIA. BOLT, TOP AND BOTTOM, OVER THE SUPPORTS AND / OR AT THE ENDS OF THE BEAM AND 12" O.C., STAGGERED FULL LENGTH OF THE BEAM. STAGGERED SPACING EQUALS 24" O.C., UNLESS NOTED OTHERWISE.

N. A HOLE GREATER IN DIAMETER THAN 40 PERCENT OF THE STUD WIDTH MAY NOT BE BORED IN ANY WOOD STUD. BORED HOLES WITH A DIAMETER LESS THAN OR EQUAL TO 60 PERCENT OF THE WIDTH OF THE STUD ARE PERMITTED IN NON - LOAD BEARING PARTITIONS OR WALLS WHERE EACH BORED STUD IS DOUBLED PROVIDED NOT MORE THAN TWO SUCH SUCCESSIVE DOUBLE STUDS OCCUR.

O. THE EDGE OF A BORED HOLE SHALL NOT BE WITHIN 5/8 OF AN INCH OF THE STUD EDGE. BORED HOLES SHALL NOT BE LOCATED AT A CUT OR NOTCH IN THE STUD.

P. UNLESS OTHERWISE NOTED, ALL LUMBER PERMANENTLY EXPOSED TO WEATHER SHALL BE PRESSURE TREATED WITH COPPER AZOLE-TYPE B (CA-B) IN ACCORDANCE WITH CURRENT AMERICAN WOOD PROTECTION ASSOCIATION (AWPA) OR APPROVED EQUAL.
   1. EXPOSED WOOD (WHEN SHOWN ON PLANS) SHALL BE TREATED AS FOLLOWS:
      a. WOOD NOT IN CONTACT WITH GROUND 0.25 ACQ
      b. WOOD IN CONTACT WITH GROUND 0.40 ACQ

Q. ALL HARDWARE IN CONTACT W/ TREATED LUMBER SHALL BE HOT-DIP GALVANIZED CONFORMING TO ASTM A653, CLASS G185 WITH 1.85 OZ OF ZINC COATING PER SQUARE FOOT, MINIMUM. ALL FASTENERS SHALL BE HOT-DIP GALVANIZED CONFORMING TO ASTM A153. STAINLESS STEEL FASTENERS MAY BE EMPLOYED AT CONTRACTOR'S OPTION.

R. PLACE 15 MIL. VAPOR BARRIER BETWEEN ANY WOOD IN CONTACT WITH BRICK OR CMU MASONRY

S. ALL WOOD FRAMING, FABRICATION, CONNECTIONS AND ERECTION SHALL CONFORM TO THE NATIONAL DESIGN SPECIFICATION FOR WOOD CONSTRUCTION BY THE AMERICAN FOREST AND PAPER ASSOCIATION,THE PLYWOOD DESIGN SPECIFICATION BY AMERICAN PLYWOOD ASSOCIATION,WCD 1 “DETAILS FOR CONVENTIONAL WOOD FRAME CONSTRUCTION” BY THE AMERICAN FOREST AND PAPER ASSOCIATION, AND THE LATEST EDITION OF THE INTERNATIONAL BUILDING CODE, CHAPTER 23.

T. JOIST WHICH FRAME INTO SUPPORTING BEAMS AT THE SAME ELEVATION SHALL BE CONNECTED WITH BA TOP FLANGE JOIST HANGERS. USE LSSU JOIST HANGERS AT RIDGE AND HIP LOCATIONS USE HCP CONNECTORS AT ALL HIP BEARING LOCATIONS. USE HRC44 TYPICALLY AT RIDGE AND HIP INTERSECTIONS. USE CC & ECC COLUMN CAPS AND ABU AND CBSQ COLUMN BASES AS REQ'D. ALL CONNECTORS AS MANUFACTURED BY SIMPSON STRONG-TIE CO., INC. OR AN APPROVED EQUAL. HANGERS/CONNECTORS SHALL BE SIZED FOR THE MEMBER SUPPORTED.

U. WOOD FRAMING ADJACENT TO STEEL CONSTRUCTION SHALL BE FASTENED TO STEEL FRAMING WITH POWDER ACTUATED FASTENERS.

V. FASTENER MINIMUM ø:
   1. 8d - 0.131"
   2. 10d - 0.148"
   3. 16d - 0.162"
   4. #9 - 0.131"
   5. #10 - 0.161"
   6. SDS - 0.25"

09. DESIGN LOADS

A. DESIGN CODES:
   - INTERNATIONAL BUILDING CODE (IBC) 2015 / ASCE 7-10

B. GRAVITY LOADS:
   1. LIVE LOADS
      a. RESIDENTIAL - 40 PSF
      b. BALCONIES - 60 PSF
      c. ROOF - 20 PSF

C. SEISMIC LOADS:
   A. THE BUILDING STRUCTURAL FRAMES/WALLS ARE DESIGNED USING THE EQUIVALENT LATERAL FORCE METHOD IN ACCORDANCE WITH THE INTERNATIONAL BUILDING CODE 2015
   B. SEISMIC PARAMETERS:
      a. SPECTRAL ACCELERATIONS
         - S_s = 0.096
         - S_1 = 0.052
      b. IMPORTANCE FACTOR I=1.00
      c. SEISMIC DESIGN CATEGORY "B"
      d. SITE CLASS "E"
   C. SEISMIC RESISTING SYSTEM:
      a. STEEL NOT SPECIFICALLY DETAILED FOR SEISMIC "R=3"
      b. LIGHT FRAMED WALLS SHEATHED WITH WOOD "R=6"
      c. STRUCTURAL PANELS RATED FOR SHEAR RESISTANCE CONTROLLING RESPONSE FACTOR USED FOR "R=3" ENTIRE BUILDING STRUCTURE (PER ASCE-7 SECTION 9.5.2)

D. WIND LOADS:
   A. BASIC WIND SPEED (3 SECOND GUST) = 144 MPH. (V_{ULT}); 131 MPH (V_{ASD})
   B. EXPOSURE = "B"
   C. RISK CATEGORY = II
   D. EDGE WIDTH "a" = 5'-0" FEET
   E. COMPONENTS & CLADDING (C&C) PRESSURES:

COMPONENTS AND CLADDING DESIGN PRESSURES (PSF): ROOF SLOPE ≤ 7°

ZONE / EWA	1		2		3		4		5		OVERHANG 1, 2	OVERHANG 3
≤ 10	-37	15	-63	15	-94	15	-36	34	-45	34	-54	-88
20	-36	14	-56	14	-78	14	-35	32	-42	32	-52	-69
50	-35	13	-47	13	-56	13	-33	31	-38	31	-51	-44
100	-34	12	-40	12	-40	12	-31	29	-36	29	-51	-25
200	-34	12	-40	12	-40	12	-30	26	-32	26	-44	-25
500	-34	12	-40	12	-40	12	-28	25	-28	25	-35	-25

1 / S000 **GENERAL NOTES** 1" = 1'-0"

AP DESIGN GROUP
CIVIL / STRUCTURAL ENGINEERING
admin@ap-eng.com
504-410-5322

STATE OF LOUISIANA
JOSHUA P. JUNEAU
License No. 44521
PROFESSIONAL ENGINEER
09/06/2022

1352 MAGAZINE ST.
NEW ORLENAS, LA
70130

No.	Description	Date

GENERAL NOTES

Project number	22005
Date	09/06/22
Drawn by	JPJ
Checked by	JPJ

S000

1 WALL SCHEDULE

S001 1/2" = 1'-0"

SYMBOL	TYPE	SIZE	SPACING (IN)	SHEATHING / CLADDING	SHEAR WALL	ANCHOR	ANCHOR SPACING (IN)	EMBED DEPTH (IN)	HORZ. REINF. [H]	[H] REINF. SPACING (IN)	VERT REINF. [V]	[V] REINF. SPACING (IN)	GROUTED SPACING (IN)	COMMENTS
W1	WD STUD NEW	2x6 NEW	16	5/8" GYP EA SIDE NEW	NO	3/4"ø NEW	SEE PLAN	8"	2x6 NEW	48	-	-	-	SEE DETAILS FOR TIE DOWNS AND CONN
W2	WD STUD EXISTING	2x4 EXISTING	16	1/2" PLY WD INT. SIDE NEW	YES	3/4"ø NEW	SEE PLAN	8"	2x4 NEW	48	-	-	-	REPAIR/REPLACE EXISTING STUDS AS NEEDED, SEE DETAILS FOR REPAIR/REPLACE, TIE DOWN AND CONN INFORMATION
W3	WD STUD EXISTING	2x4 EXISTING	16	5/8" PLY WD INT. SIDE NEW	YES	3/4"ø NEW	SEE PLAN	8"	2x4 NEW	24	-	-	-	REPAIR/REPLACE EXISTING STUDS AS NEEDED, SEE DETAILS FOR REPAIR/REPLACE, TIE DOWN AND CONN INFORMATION, LATERAL BRACING TO REMAIN UNTIL FULLY BLOCKED AND SHEATHED

NOTE: UNLESS NOTED OTHERWISE
1. VERT REINF FOR CMU WALLS TO BE L-BAR EXTENDING TO BOT MAT OF CONC FOUNDATIONS, TYP SPLICE
2. HORZ REINF BASIS OF DESIGN IS HOHMANN & BARNARD INC
   A. LM = LADDER MESH
   B. LTM = LADDER TRI-MESH
   C. TM = TRUSS MESH
   D. TTM = TRUSS TRI- MESH
3. ANCHORS TO BE A307 GRADE, THREADED RODS, CAST IN PLACE. POST INSTALLED TO BE EPOXY ANCHORED 10" EMBED
4. HORZ. REINF. SPACING FOR WD WALLS DENOTES VERTICAL SPACING OF IN WALL BLOCKING, ENSURE BLOCKING PROVIDED FOR SHEATHING PER
5. ALL EXTERIOR WALLS TO BE FULLY BLOCKED AND SHEATHED PRIOR TO REMOVING ANY LATERAL BRACING.
6. ALL INTERIOR WALLS TO BE FULLY BLOCKED AND AT A MINIMUM BE SHEATHED ON ONE SIDE PRIOR TO REMOVING ANY LATERAL BRACING.
7. ALL EXTERIOR SIDING TO BE FULLY REPAIRED AND REPLACED PRIOR TO REMOVING ANY LATERAL BRACING.

2 SHEATHING SCHEDULE

S001 1/2" = 1'-0"

SHEATHING PLY WD THICKNESS	MAX SPACING ALONG SUPPORTING MEMBER			
ROOF	FIELD		EDGES/BOUNDARIES	
	8D	#10 SCREW	8D	#10 SCREW
1/2"	6" O.C.	6" O.C.	4" O.C.	4" O.C.
3/4"	6" O.C.	6" O.C.	4" O.C.	4" O.C.
FLOOR	FIELD		EDGES/BOUNDARIES	
	8D	#10 SCREW	8D	#10 SCREW
1/2"	12" O.C.	12" O.C.	6" O.C.	6" O.C.
3/4"	12" O.C.	12" O.C.	6" O.C.	6" O.C.
WALL	FIELD		EDGES/BOUNDARIES	
	8D	#10 SCREW	8D	#10 SCREW
1/2"	6" O.C.	6" O.C.	4" O.C.	4" O.C.
3/4"	6" O.C.	6" O.C.	4" O.C.	4" O.C.

NOTES: UNLESS NOTED OTHERWISE
1. ALL SHEATHING TO HAVE SOLID BLOCKING @ ALL HORZ./VERT. JOINTS.
2. VERT. JOINTS IN PLY. SHEATHING TO BE STAGGERED @ EVERY 4'-0" O.C.
3. 8D SHANK NAILS TO HAVE MIN ø OF 0.131"
4. #10 TEK SCREWS TO HAVE NOMINAL ø OF 0.19"
5. MINIMUM PENETRATION INTO FRAMING 1-1/2"
6. DECKING/SHEATHING TO BE GLUED AND SCREWED AND EITHER TONGUE AND GROOVE OR UTILIZE H-CLIPS AT 1'-6" SPACING

3 HEADER SCHEDULE

S001 1/2" = 1'-0"

OPENING LENGTH (FT)	HEADER SIZE	# OF KING JACK STUDS EA SIDE
2	2-2x4	1-2x4
2	2-2x4	1-2x4
3	2-2x4	1-2x4
4	2-2x6	1-2x4
5	2-2x6	2-2x4
6	2-2x8	2-2x4
7	2-2x10	2-2x4
8	2-2x12	3-2x4
9	2-2x12	3-2x4
10	3-2x4	4-2x4
11	4-2x12	4-2x4
12	4-2x12	4-2x4

NOTES: UNLESS NOTED OTHERWISE
1. HEADERS TO BE BEARING SUPPORTED ON EA. SIDE BY JACK STUDS
2. JACK CRIPPLES TO BE PROVIDED AT LOWER & UPPER FLOOR FOR FULL LOAD TRANSFER
3. HEADER MEMBERS SIZES PROVIDED ASSUMED STRONG AXIS ORIENTATION
4. MEMBERS TO BE NAILED TOGETHER w/ MINIMUM:
   A. 2x4-2x6 - 3-16d NAILS @ 16" O.C.
   B. 2x8-2X10 - 4 16d NAILS @ 12" O.C.
   C. 2X12 - 4-1/4" WD SCREWS @ 12" O.C. OR 6-16d NAILS @ 12" O.C.

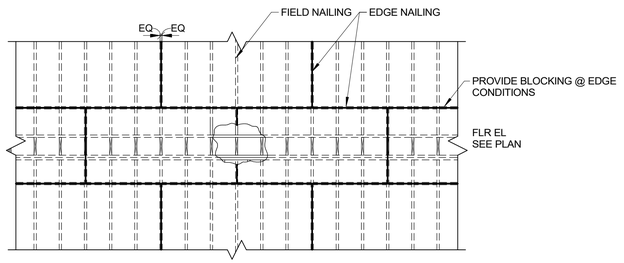

WALL

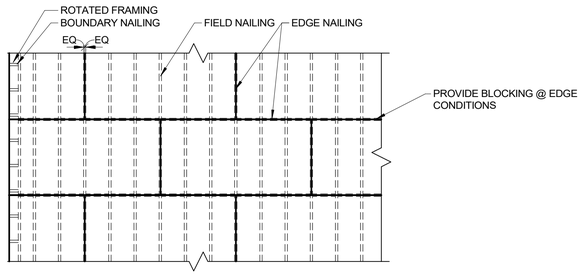

FLOOR / ROOF

NOTES: UNLESS NOTED OTHERWISE
1. SEE SCHEDULE FOR FASTENER SIZES AND SPACING

4 SHEATHING LAYOUT

S001 1/4" = 1'-0"

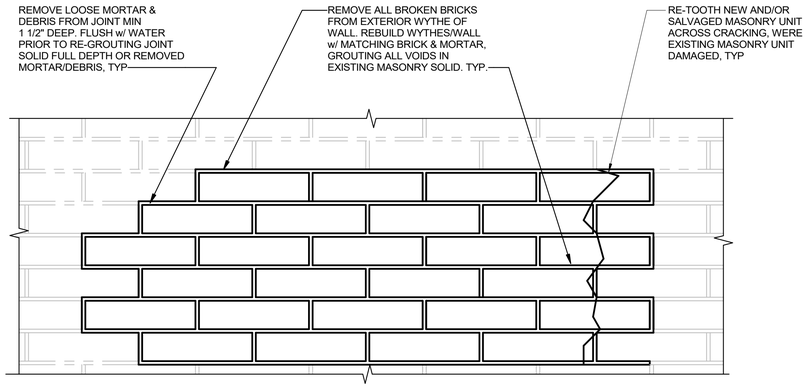

5 DETAIL - TUCK POINTING

S001 1 1/2" = 1'-0"

AP DESIGN GROUP
CIVIL / STRUCTURAL ENGINEERING
admin@ap-eng.com
504-410-5322

STATE OF LOUISIANA
JOSHUA P. JUNEAU
License No. 44521
PROFESSIONAL ENGINEER

09/06/2022

1352 MAGAZINE ST.
NEW ORLENAS, LA
70130

No.	Description	Date

TYPICAL DETAILS & SCHEDULES

Project number	22005
Date	09/06/22
Drawn by	JPJ
Checked by	JPJ

S001

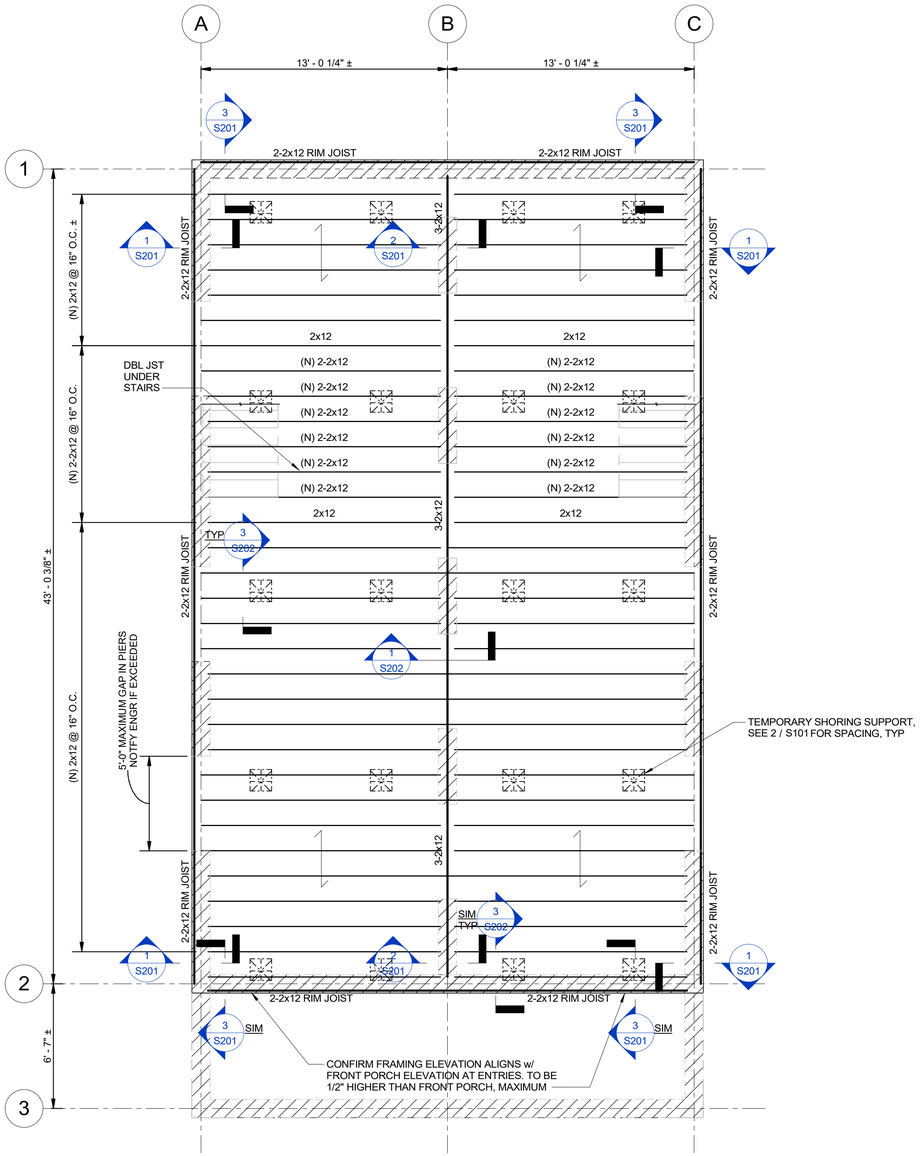

PLAN NOTES: UNLESS NOTED OTHERWISE

1. FIRST FLR. EL. = 3'-0"±. WOOD FLOOR FRAMING EL. = 1'-10 1/4"±
2. REUSE EXISTING FLOOR DECKING WHERE POSSIBLE. REPLACE IN LIKE KIND WHERE REUSE IS IMPOSSIBLE. SEE SCHEDULE FOR FASTENER PATTERN. PROVIDE BLOCKING AT LEAST TWO-THIRDS DEPTH OF DEEPEST ADJACENT FLOOR JOIST @ ALL FLR. DECK JOINTS NOT ALIGNED TO FLR. RAFTERS.
3. ⟋⟋⟋ - DENOTES EXISTING SOIL BEARING FOUNDATIONS
4. EXISTING 2x4 STUD WALLS ABOVE NOT SHOWN FOR CLARITY
5. 2-2x6 @ 1'-4" - DENOTES TWO (2) WOOD 2x6 FRAMING MEMBERS @ 16" O.C., MIN BLOCKING MATCH FRAMING DEPTH @ ONE-THIRD POINTS
6. ⟵⟶ - DENOTES DECK SPAN DIRECTION
7. S - DENOTES POLE SHORE OR OTHER TEMPORARY SHORING POST WITH ALLOWABLE COMPRESSION CAPACITY OF 5 KIPS,SEE 3 / S202
8. CONFIRM ALL EXISTING DIMENSIONS PRIOR TO PROCEEDING. SEE ARCH FOR FINAL LAYOUT DIMENSIONS TO SUPERCEDE THOSE SHOWN HERE IN. FIELD VERIFY ALL DIMENSIONS SHOWN w/ "±" SYMBOL PRIOR TO PROCEEDING w/ WORK.
9. NOTCHED EXISTING MEMBERS MUST MEET CRITERIA OUTLINED IN DETAILS FOR REUSE, SEE 2 / S202

1 S201 S101 FIRST FLOOR FRAMING PLAN

1/4" = 1'-0"

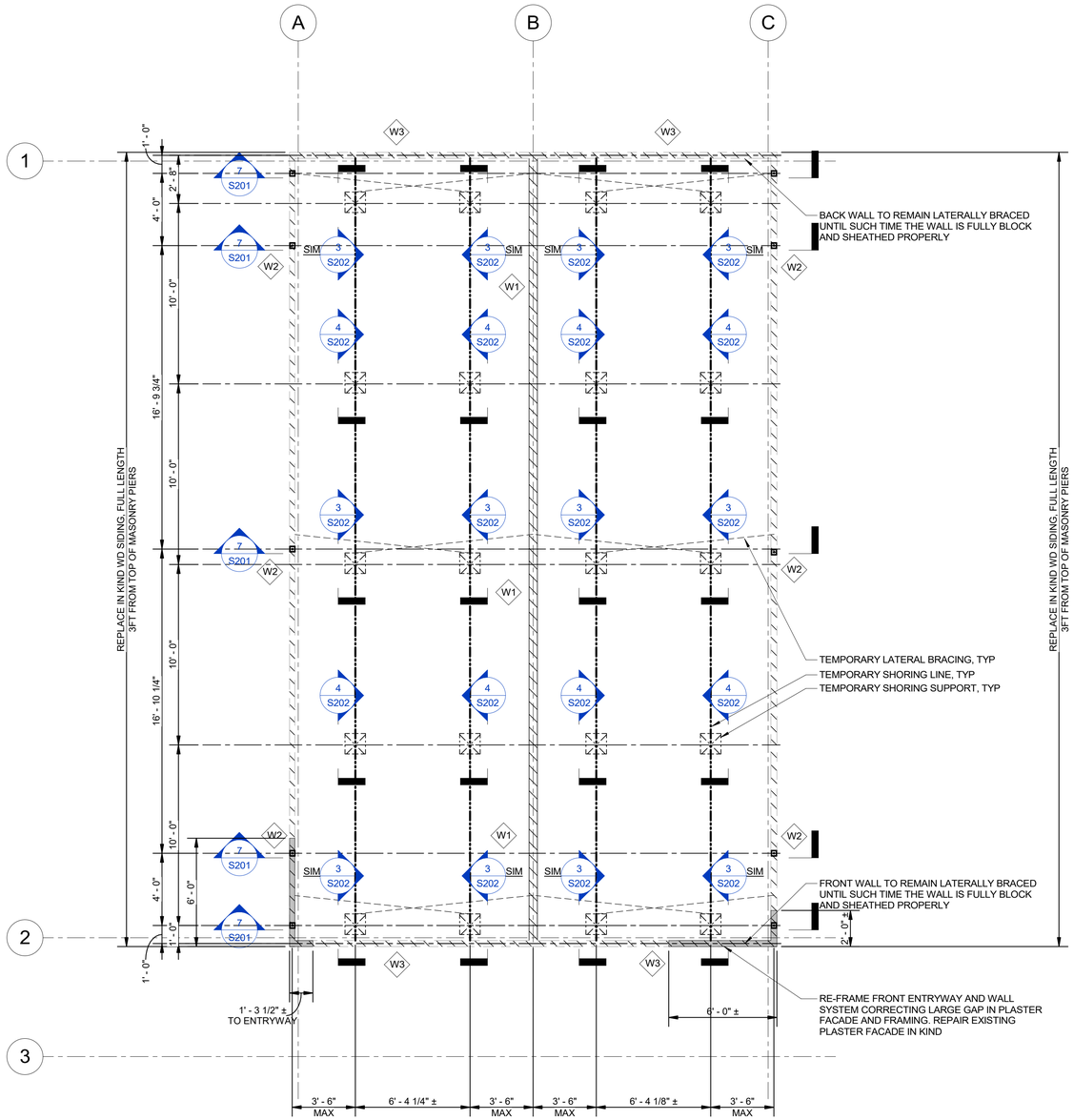

PLAN NOTES: UNLESS NOTED OTHERWISE

1. ▨ - DENOTES LOAD BEARING WALLS, SEE TAG & SCHED
2. ▨ - DENOTES EXISTING LOAD BEARING WALLS, SEE TAG & SCHED
3. W1 - DENOTES WALL TYPE, W1, SEE SCHEDULE
4. ◉ - DENOTES BUILDING TIE-IN DOWN LOCATION SEE 6 / S201 & SCHEDULE
5. ▬ - DENOTES SECTION OF WALL TO BE REFRAMED, SEE TAG & SCHED FOR WALL FRAMING INFORMATION
6. ——·—— - DENOTES TEMPORARY SHORING LINE
7. S - DENOTES POLE SHORE OR OTHER TEMPORARY SHORING POST WITH ALLOWABLE COMPRESSION CAPACITY OF 5 KIPS w/ MIN (3)-2x12 BEAM SPANNING BETWEEN EACH, SEE 3 / S202
8. - - - - DENOTES TEMPORARY LATERAL BRACING WITH ALLOWABLE CAPACITY OF 4 KIPS COMPRESSION EACH, ALIGN WITH VERTICAL SHORING SUPPORTS SEE 3 / S202

2 S101 WALL FRAMING PLAN

1/4" = 1'-0"

AP DESIGN GROUP
CIVIL / STRUCTURAL ENGINEERING
admin@ap-eng.com
504-410-5322

STATE OF LOUISIANA
JOSHUA P. JUNEAU
License No. 44521
PROFESSIONAL ENGINEER
09/06/2022

1352 MAGAZINE ST.
NEW ORLENAS, LA
70130

No.	Description	Date

FLOOR PLANS

Project number	22005
Date	09/06/22
Drawn by	ADH
Checked by	JPJ

S101

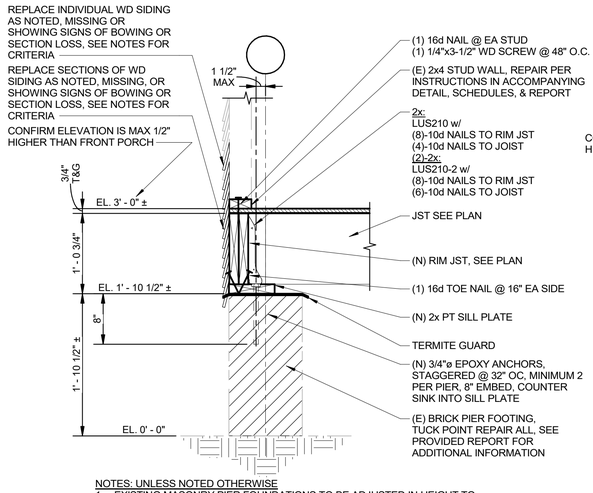

NOTES: UNLESS NOTED OTHERWISE

1. EXISTING MASONRY PIER FOUNDATIONS TO BE ADJUSTED IN HEIGHT TO ALLOW FOR 1ST FLOOR FRAMING TO BE INSTALLED AT CORRECT FINISHED FLOOR ELEVATION IN CORRELATION w/ BASE FLOOD CERTIFICATE AND FRONT PORCH ELEVATIONS.
2. PORTIONS OF SHEATHING NOT SHOWN FOR CLARITY.
3. CRITERIA FOR REPLACE A MEMBER DUE TO DEFLECTION: ANY MEMBER DEFLECTING IN ANY DIRECTION MORE THAN 1/2"
4. CRITERIA FOR REPLACING MEMBERS DUE TO SECTION LOSS: ANY MEMBER WITH 25% SECTION LOSS THROUGH ANY PORTION OR AS A SUM OF THE FULL MEMBER.
5. LARGER TREATED SILL PLATES MAY BE USED. IN THE EVENT PT 8x8 SILL BEAMS ARE USED SEE 1 / S202
6. REPAIR/REPLACEMENT NOTES FOR EXISTING EXTERIOR WOOD SIDING VALID FOR FULL EXTERIOR OF BUILDING
7. PORTIONS OF WALL NOT FRAMED AS SHOWN TO BE RE-FRAMED COMPLETELY OR WITH REPAIR DETAILS PROVIDED ADJUSTING CONNECTIONS AS REQUIRED.

1 **SECTION AT PERIMETER**
S101 | S201 1" = 1'-0"

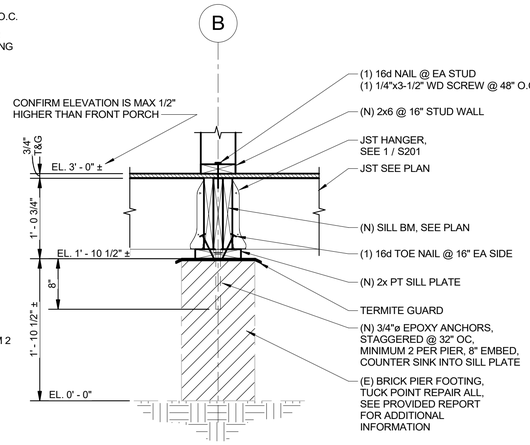

NOTES: UNLESS NOTED OTHERWISE

1. EXISTING MASONRY PIER FOUNDATIONS TO BE ADJUSTED IN HEIGHT TO ALLOW FOR 1ST FLOOR FRAMING TO BE INSTALLED AT CORRECT FINISHED FLOOR ELEVATION IN CORRELATION w/ BASE FLOOD CERTIFICATE AND FRONT PORCH ELEVATIONS.
2. SHEATHING NOT SHOWN FOR CLARITY.

2 **SECTION AT MIDLINE**
S101 | S201 1" = 1'-0"

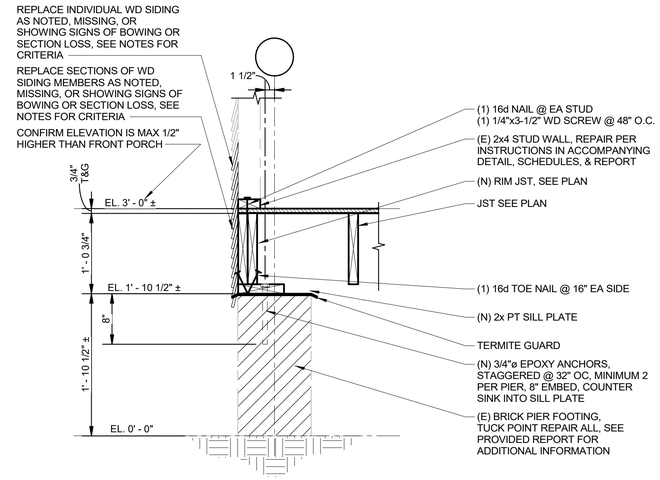

NOTES: UNLESS NOTED OTHERWISE

1. EXISTING MASONRY PIER FOUNDATIONS TO BE ADJUSTED IN HEIGHT TO ALLOW FOR 1ST FLOOR FRAMING TO BE INSTALLED AT CORRECT FINISHED FLOOR ELEVATION IN CORRELATION w/ BASE FLOOD CERTIFICATE AND FRONT PORCH ELEVATIONS.
2. PORTIONS OF SHEATHING NOT SHOWN FOR CLARITY.
3. CRITERIA FOR REPLACE A MEMBER DUE TO DEFLECTION: SEE 1 / S201
4. CRITERIA FOR REPLACING MEMBERS DUE TO SECTION LOSS: SEE 1 / S201
5. REPAIR/REPLACEMENT NOTES FOR EXISTING EXTERIOR WOOD SIDING VALID FOR FULL EXTERIOR OF BUILDING
6. PORTIONS OF WALL NOT FRAMED AS SHOWN TO BE RE-FRAMED COMPLETELY OR WITH REPAIR DETAILS PROVIDED ADJUSTING CONNECTIONS AS REQUIRED.

3 **SECTION AT PERIMETER 2**
S101 | S201 1" = 1'-0"

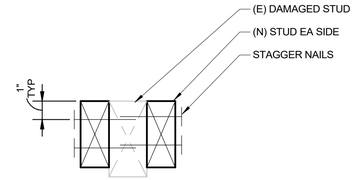

NOTE: UNLESS NOTED OTHERWISE

1. DETAIL CAN ALSO BE USED AS SISTERING DETAIL OF (3) THREE STUD MEMBERS (2x4 & 2x6). TREAT EXISTING MEMBER SHOWN AS NEW MEMBER
2. FASTENERS TO BE MIN 10dX2-1/2" NAILS, SPACED AT 12" OC

4 **STUD REPAIR SECTION**
S201 3" = 1'-0"

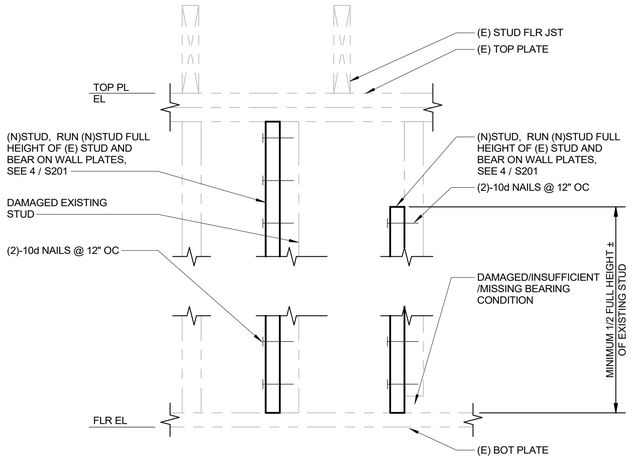

NOTES: UNLESS NOTED OTHERWISE

1. ANY STUD OR SECTION OF STUDS:
   A. NOTED ON PLANS
   B. MARKED IN FIELD PER PROVIDED REPORT GUIDELINES
   C. SHOWING SIGNS OF BOWING OR SECTION LOSS TO BE SISTERED AS SHOWN.
      a. BOWING CRITERIA: ANY MEMBER DEFLECTING IN ANY DIRECTION MORE THAN 1/2"
      b. SECTION LOSS CRITERIA: ANY MEMBER WITH 25% SECTION LOSS THROUGH ANY PORTION OR AS A SUM OF THE FULL MEMBER.
2. REPLACED IN FULL HEIGHT WITH EITHER (2)-2x4 OR (1)-2x6 STUD ANY STUD OR SECTION OF STUDS:
   A. NOTED ON PLANS
   B. MARKED IN FIELD PER PROVIDED REPORT GUIDELINES
   C. SHOWING SIGNS OF BOWING OR SECTION LOSS TO BE SISTERED AS SHOWN.
      a. BOWING CRITERIA: ANY MEMBER DEFLECTING IN ANY DIRECTION MORE THAN 5/8"
      b. SECTION LOSS CRITERIA: ANY MEMBER WITH 50% SECTION LOSS THROUGH ANY PORTION OR AS A SUM OF THE FULL MEMBER.
3. INSUFFICIENT BEARING CONDITION IS ANY BEARING CONDITION:
   A. WITH SISTERED CONDITION NOT AS SHOWN
   B. 3/4 OR MEMBER OR LESS IS IN CONTACT w/ BEARING SURFACE
   C. MEMBER NOT IN CONTACT WITH BEARING SURFACE AT ALL
   D. MEMBER IN CONTACT WITH BEARING SURFACE AT ANGLE.
4. ALL NEW SISTERED STUD MEMBERS SHOWN TO MATCH EXISTING STUD SIZES WITHIN 1/2"±

5 **STUD REPAIR DETAIL**
S201 1 1/2" = 1'-0"

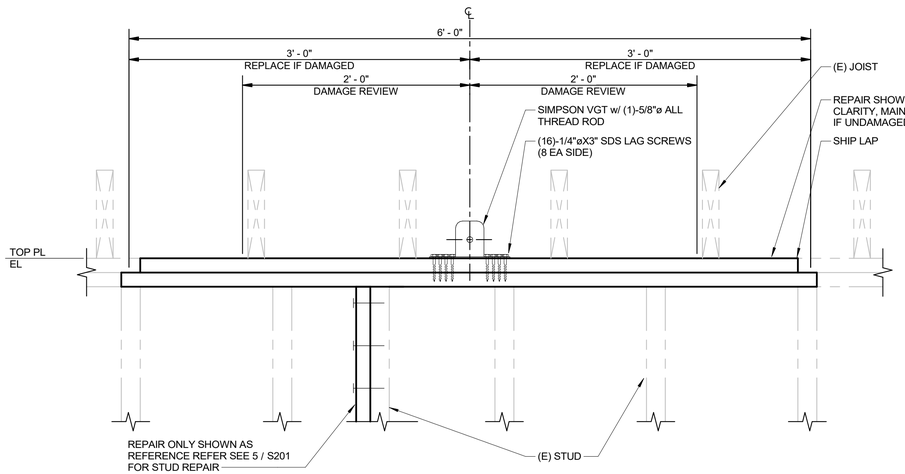

NOTES: UNLESS NOTED OTHERWISE

1. IF EXISTING TOP PLATE IS DAMAGED WITHIN 2FT IN EITHER DIRECTION OF THE TIE-IN CONNECTION REPLACED FOR 6FT SECTION OF TOP PLATE CENTERED ON CONNECTION POINT. IF WITHIN 2FT OF CORNER, REPLACE TO CORNER.
2. REPLACEMENT TOP PLATE TO MATCH WALL SIZE.
3. REPLACEMENT TO BE MINIMUM (2)-2X.
4. CONTINUE TOP PLATE REPLACEMENT TO NEXT (FURTHEST STUD FROM CONNECTION) IF EXTENTS OF REPAIR FALLS BETWEEN STUDS.
5. CONNECTION SHOWN OCCURS AT 1ST & 2ND FLOORS.

6 **BUILDING TIE-IN DETAIL**
S201 1 1/2" = 1'-0"

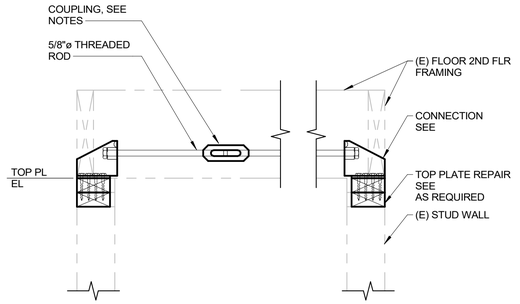

NOTES: UNLESS NOTED OTHERWISE

1. IF EXISTING TOP PLATE IS DAMAGED WITHIN 2FT IN EITHER DIRECTION OF THE TIE-IN CONNECTION REPLACED FOR 6FT SECTION OF TOP PLATE CENTERED ON CONNECTION POINT. IF WITHIN 2FT OF CORNER, REPLACE TO CORNER.
2. REPLACEMENT TOP PLATE TO MATCH WALL SIZE.
3. REPLACEMENT TO BE MINIMUM (2)-2X.
4. CONTINUE TOP PLATE REPLACEMENT TO NEXT (FURTHEST STUD FROM CONNECTION) IF EXTENTS OF REPAIR FALLS BETWEEN STUDS.
5. COUPLING OF THREADED ROD ACCEPTABLE, PROVIDE COUPLING RATED FOR MINIMUM 6,000LBS ALLOWABLE LOADING. FOLLOW COUPLING GUIDELINES FOR THREAD EXTENTS, 1/4" ALLOWABLE SAG AT OVERALL MIDPOINT OF THREADED TIE ROD SYSTEM AFTER TIGHTENED

7 **BUILDING TIE-IN SECTION**
S101 | S201 1 1/2" = 1'-0"

AP DESIGN GROUP
CIVIL / STRUCTURAL ENGINEERING
admin@ap-eng.com
504-410-5322

STATE OF LOUISIANA
JOSHUA P. JUNEAU
License No. 44521
PROFESSIONAL ENGINEER
09/06/2022

1352 MAGAZINE ST.
NEW ORLENAS, LA
70130

No.	Description	Date

SECTIONS & REPAIR DETAILS

Project number	22005
Date	09/06/22
Drawn by	AH
Checked by	JJ

S201

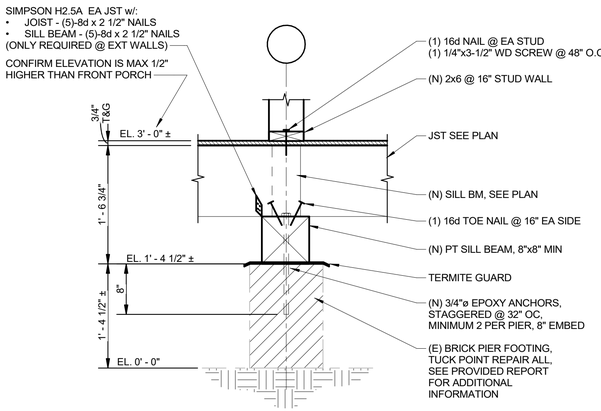

NOTES: UNLESS NOTED OTHERWISE
1. EXISTING MASONRY PIER FOUNDATIONS TO BE ADJUSTED IN HEIGHT TO ALLOW FOR 1ST FLOOR FRAMING TO BE INSTALLED AT CORRECT FINISHED FLOOR ELEVATION IN CORRELATION w/ BASE FLOOD CERTIFICATE AND FRONT PORCH ELEVATIONS.
2. SHEATHING NOT SHOWN FOR CLARITY.
3. PORTIONS OF WALL NOT FRAMED AS SHOWN TO BE RE-FRAMED COMPLETELY OR WITH REPAIR DETAILS PROVIDED ADJUSTING CONNECTIONS AS REQUIRED.

1 DETAIL - SILL BEAM CONNECTION
S101 | S202 1" = 1'-0"

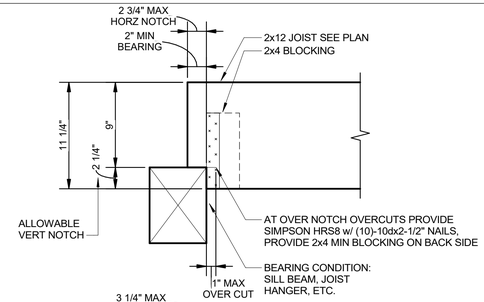

NOTES: UNLESS NOTED OTHERWISE
1. NEW & EXISTING JOIST MUST MEET THE NOTCHING REQUIREMENTS SHOWN TO BE USED/REUSED
2. VERTICAL OVERCUT NOT ACCEPTABLE, REPLACE MEMBER IN KIND

2 JOIST NOTCH DETAIL
S202 1 1/2" = 1'-0"

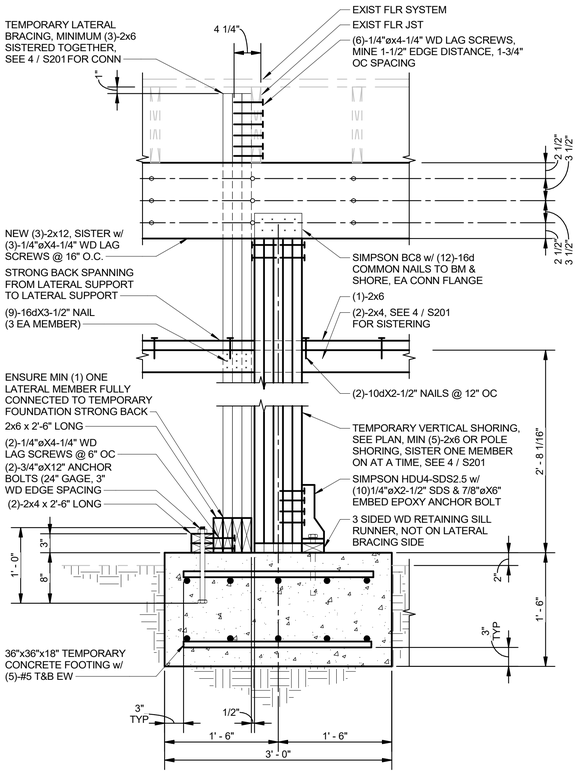

NOTES: UNLESS NOTED OTHERWISE
1. LATERAL BRACING TO BE PLACED AT 35°- 45° ANGLE TO LEVEL 1 FINISHED FLOOR
2. LEVEL 1 FRAMING NOT SHOWN FOR CLARITY
3. IF PROVIDED SHORING ARE POLE SHORES SEE POLE SHORE SUPPLIER TYPICAL CONNECTION GUIDELINES

3 SHORING SECTION
S101 | S202 1" = 1'-0"

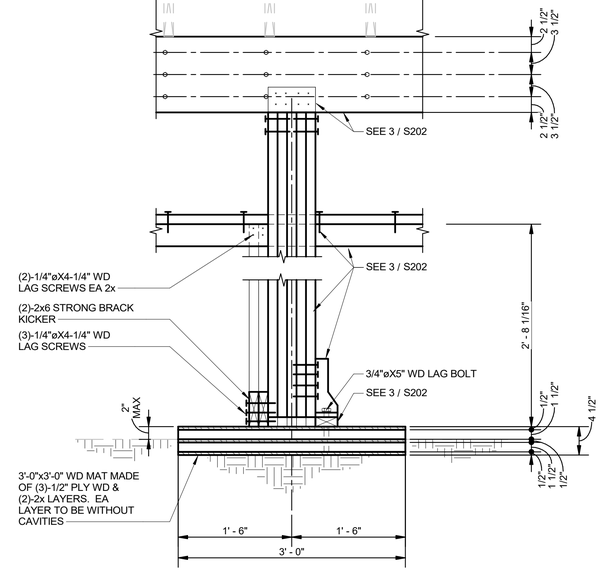

NOTES: UNLESS NOTED OTHERWISE
1. LEVEL 1 FRAMING NOT SHOWN FOR CLARITY
2. IF PROVIDED SHORING ARE POLE SHORES SEE POLE SHORE SUPPLIER TYPICAL CONNECTION GUIDELINES

4 SHORING SECTION 02
S101 | S202 1" = 1'-0"

AP DESIGN GROUP
CIVIL / STRUCTURAL ENGINEERING
admin@ap-eng.com
504-410-5322

STATE OF LOUISIANA
JOSHUA P. JUNEAU
License No. 44521
PROFESSIONAL ENGINEER
09/06/2022

1352 MAGAZINE ST.
NEW ORLENAS, LA
70130

No.	Description	Date

SECTIONS & REPAIR DETAILS

Project number	22005
Date	09/06/22
Drawn by	Author
Checked by	Checker

S202