6/24/2022 4:45:59 PM

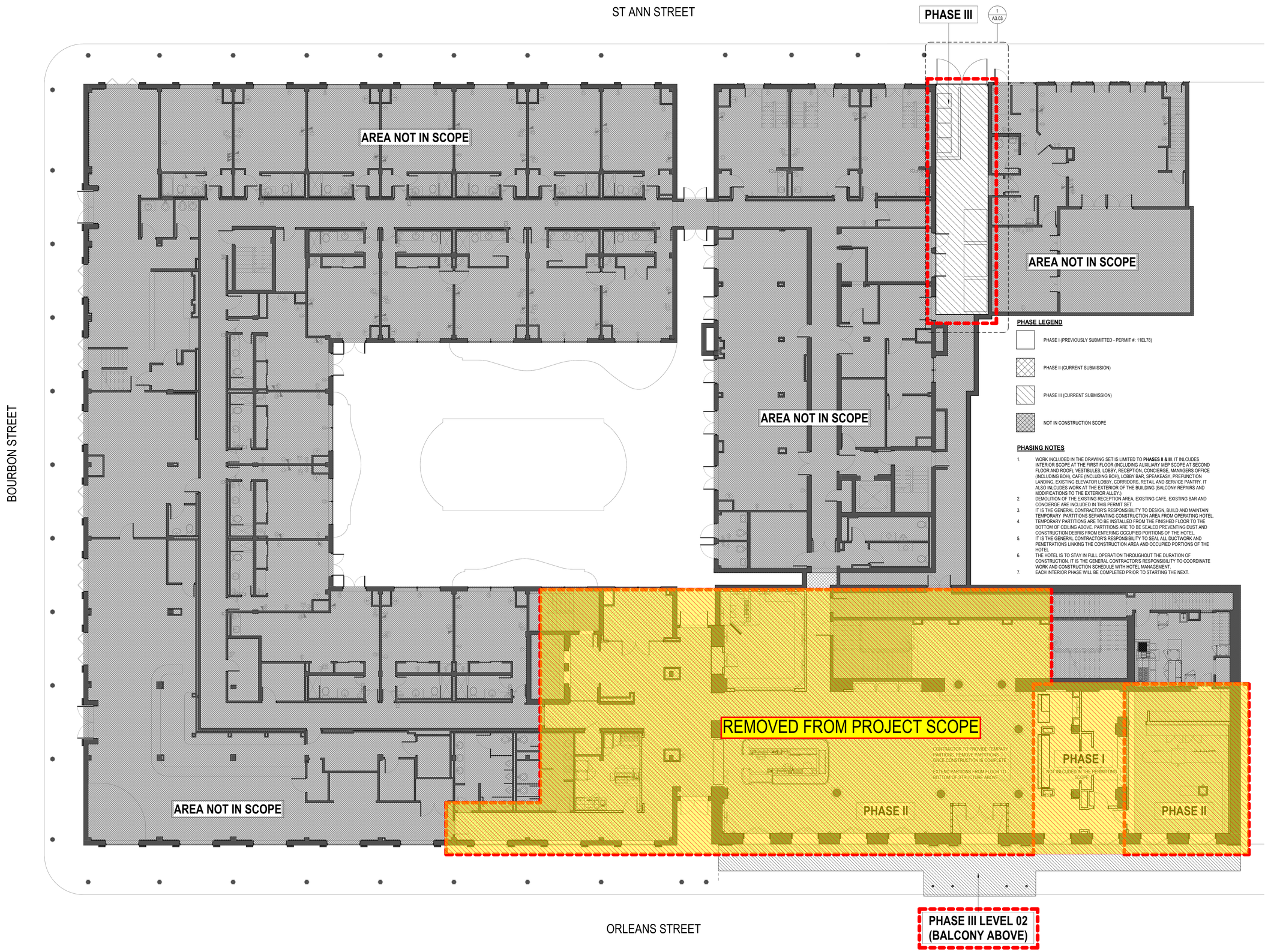

PHASE LEGEND

- PHASE I (PREVIOUSLY SUBMITTED - PERMIT #: 11EL78)
- PHASE II (CURRENT SUBMISSION)
- PHASE III (CURRENT SUBMISSION)
- NOT IN CONSTRUCTION SCOPE

PHASING NOTES

1. WORK INCLUDED IN THE DRAWING SET IS LIMITED TO **PHASES II & III**. IT INLCUDES INTERIOR SCOPE AT THE FIRST FLOOR (INCLUDING AUXILIARY MEP SCOPE AT SECOND FLOOR AND ROOF); VESTIBULES, LOBBY, RECEPTION, CONCIERGE, MANAGERS OFFICE (INCLUDING BOH), CAFE (INCLUDING BOH), LOBBY BAR, SPEAKEASY, PREFUNCTION LANDING, EXISTING ELEVATOR LOBBY, CORRIDORS, RETAIL AND SERVICE PANTRY. IT ALSO INLCUDES WORK AT THE EXTERIOR OF THE BUILDING (BALCONY REPAIRS AND MODIFICATIONS TO THE EXTERIOR ALLEY.)
2. DEMOLITION OF THE EXISTING RECEPTION AREA, EXISTING CAFE, EXISTING BAR AND CONCIERGE ARE INCLUDED IN THIS PERMIT SET.
3. IT IS THE GENERAL CONTRACTOR'S RESPONSIBILITY TO DESIGN, BUILD AND MAINTAIN TEMPORARY PARTITIONS SEPARATING CONSTRUCTION AREA FROM OPERATING HOTEL.
4. TEMPORARY PARTITIONS ARE TO BE INSTALLED FROM THE FINISHED FLOOR TO THE BOTTOM OF CEILING ABOVE. PARTITIONS ARE TO BE SEALED PREVENTING DUST AND CONSTRUCTION DEBRIS FROM ENTERING OCCUPIED PORTIONS OF THE HOTEL.
5. IT IS THE GENERAL CONTRACTOR'S RESPONSIBILITY TO SEAL ALL DUCTWORK AND PENETRATIONS LINKING THE CONSTRUCTION AREA AND OCCUPIED PORTIONS OF THE HOTEL
6. THE HOTEL IS TO STAY IN FULL OPERATION THROUGHOUT THE DURATION OF CONSTRUCTION. IT IS THE GENERAL CONTRACTOR'S RESPONSIBILITY TO COORDINATE WORK AND CONSTRUCTION SCHEDULE WITH HOTEL MANAGEMENT.
7. EACH INTERIOR PHASE WILL BE COMPLETED PRIOR TO STARTING THE NEXT.

1 PROJECT PHASING PLAN
G0.01 SCALE: 1/8" = 1'-0"

Autodesk Docs://22-22174 - Bourbon Orleans Hotel/CN22174 Bourbon Orleans Hotel.rvt

TRAPOLINPEER
ARCHITECTS

CONSTRUCTION DOCUMENTS

BOURBON ORLEANS HOTEL
RENOVATION
717 ORLEANS AVE.
NEW ORLEANS, LA 70116

OWNER
DiamondRock Hospitality
2 Bethesda Metro Center, Suite 1400
Bethesda, MD 20814
(206) 930-9956

ARCHITECT
TRAPOLIN-PEER
850 TCHOUPITOULAS ST.
NEW ORLEANS, LA 70130
(504) 523-2772
www.trapolinpeer.com

CONTRACTOR
CONTRACTOR NAME
Address
City, State Zip
(area code) number

PAULA MAY PEER
REG. NO. 10396
STATE OF LOUISIANA
REGISTERED ARCHITECT

REVISION #	DESCRIPTION	DATE
1	PROGRESS SET	05/03/2022
2	PRICING SET	06/24/2022
3	PERMIT SET	06/27/2022

FINAL PERMIT RELEASE

DEPARTMENT OF SAFETY AND PERMITS
PLAN REVIEW DIVISION

These plans and specifications have been examined and be endorsed as in compliance with the Louisiana State Uniform Construction Code as adopted by the City of New Orleans. Use here noted. This action is contingent upon compliance with all applicable codes and laws governing the construction and that inspections were completed.
Plan Review Division Stamp

Any changes to or deviations from approved plans must be submitted for review and approval before work is performed and each revised copy shall be marked plans from date and initialed and stamped.

Work beyond that which is specified in these approved drawings is not authorized. Performing work beyond the scope of these plans is a violation of the Louisiana State Uniform Construction Code and amendments to the International Building Code and/or Ordinances of the City of New Orleans. Call building permit.

Chief Plans Examiner

REVIEWED FOR CODE COMPLIANCE

waejones 11/03/2022

© TRAPOLIN-PEER ARCHITECTS, APC

PROJECT NUMBER
CN 22174

ISSUE DATE
06/27/2022

SITE / PHASING PLAN

G0.01

6/24/2022 4:46:05 PM

LIFE SAFETY - OCCUPANCY CLASSIFICATION

- A-2 (ASSEMBLY)
- CIRCULATION / COMMON
- RETAIL
- B (BUSINESS)
- MECHANICAL / STORAGE

PHASE II & III IS THE ONLY PORTION OF WORK BEING SUBMITTED FOR PERMIT.
PHASE I IS SHOWN FOR CLARITY AND HAS BEEN SUBMITTED UNDER A SEPARATE PERMIT (**AR-22-009420**)

LIFE SAFETY SYMBOL LEGEND

DOOR TAG: EGRESS WIDTH

DOOR: XXX OCC. — NUMBER OF OCC. EGRESSING
RATING: 90 MIN.
PROVIDED WIDTH: 34" REQ: 100 x 0.2 = 20.0"

AREA TAG

Name — OCCUPANCY TYPE
CLASSIFICATION — AREA
XXX — NUMBER OF OCCUPANTS
XXX OCC

- 1/2 HR RATED WALL
- 1HR RATED WALL
- 2HR RATED WALL
- 5' - 4" — EGRESS DISTANCE
- EGRESS PATH
- 1000 / 50 — NUMBER OF OCCUPANTS EGRESSING
- DOOR RATING
- FEC-R — FIRE EXTINGUISHER CABINET (RECESSED)
- FEC — FIRE EXTINGUISHER CABINET
- WATER CURTAIN

1 LEVEL 01 - LIFE SAFETY PLAN
LS1.01 SCALE: 1/8" = 1'-0"

Autodesk Docs://22-22174 - Bourbon Orleans Hotel/CN22174 Bourbon Orleans Hotel.rvt

TRAPOLINPEER
ARCHITECTS

CONSTRUCTION DOCUMENTS

BOURBON ORLEANS HOTEL
RENOVATION
717 ORLEANS AVE.
NEW ORLEANS, LA 70116

OWNER
DiamondRock Hospitality
2 Bethesda Metro Center, Suite 1400
Bethesda, MD 20814
(206) 930-9956

ARCHITECT
TRAPOLIN-PEER
850 TCHOUPITOULAS ST.
NEW ORLEANS, LA 70130
(504) 523-2772
www.trapolinpeer.com

CONTRACTOR
CONTRACTOR NAME
Address
City, State Zip
(area code) number

REVISION #	DESCRIPTION	DATE
1	PROGRESS SET	05/03/2022
2	PRICING SET	06/24/2022
3	PERMIT SET	06/27/2022

FINAL PERMIT RELEASE
DEPARTMENT OF SAFETY AND PERMITS
PLAN REVIEW DIVISION
These plans and specifications have been examined and be evidence of compliance with the requirements of the Code of Ordinances of the City of New Orleans, has been noted. This action is contingent upon compliance with the requirements of the Code during construction and that inspection upon completion.
Approved for Code Compliance Only
Any changes to or deviations from approved plans must be submitted for review and approval prior to construction. Approved work must stay until the revised plans have been examined and approved.
Work beyond that which is specified in these approved drawings is not authorized. Performing work beyond the scope of these plans is a violation of the Code of Ordinances. Work must be in accordance with amendments to the International Building Code and/or revisions to the Code of Ordinances, and building permits.
Chief Plans Examiner
REVIEWED FOR CODE COMPLIANCE
waejones 11/03/2022

© TRAPOLIN-PEER ARCHITECTS, APC

PROJECT NUMBER
CN 22174

ISSUE DATE
06/27/2022

LIFE SAFETY PLAN

LS1.01

6/24/2022 4:45:34 PM

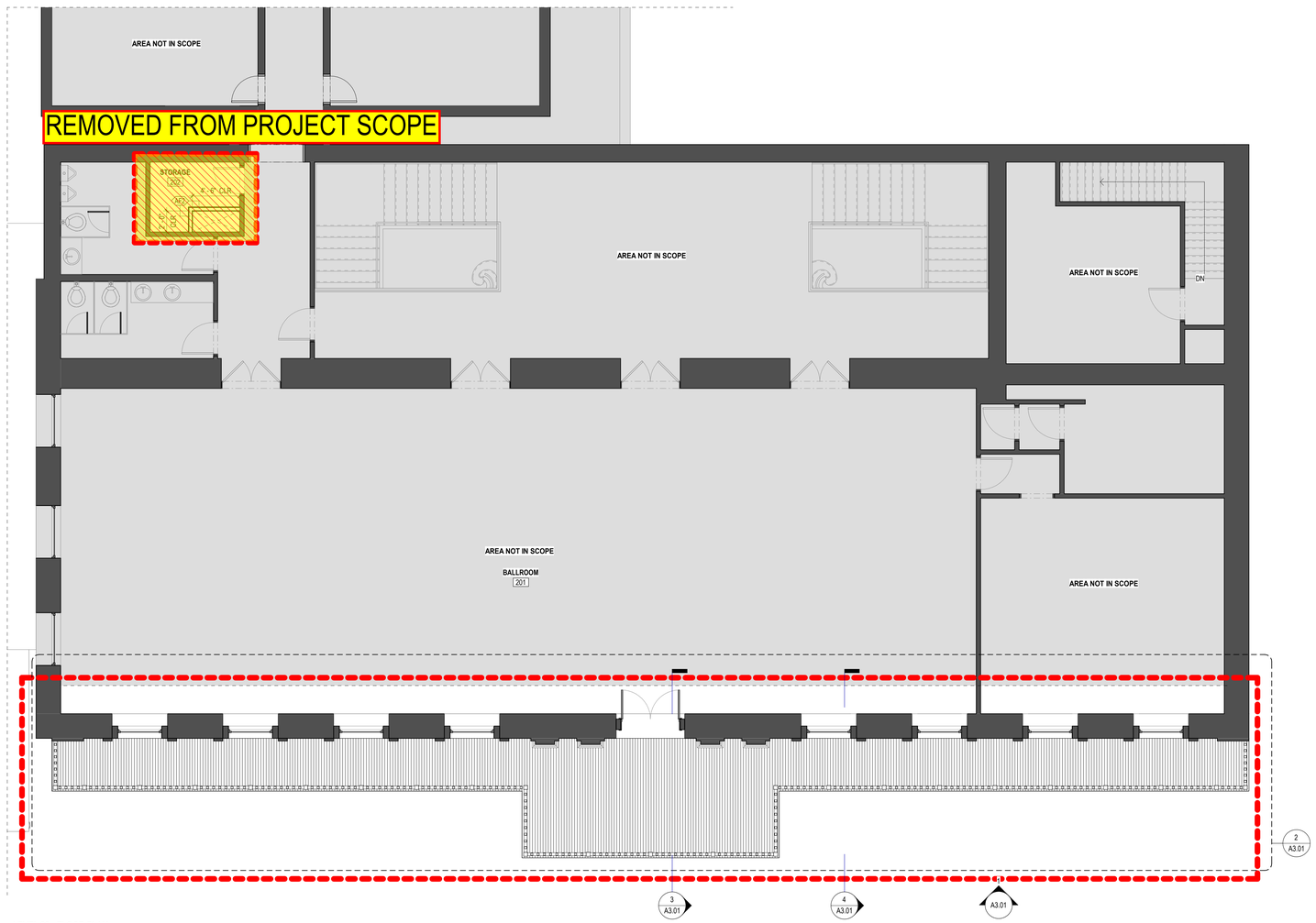

1 LEVEL 02 - FLOOR PLAN
A2.02 SCALE: 3/16" = 1'-0"

Autodesk Docs://22-22174 - Bourbon Orleans Hotel/CN22174 Bourbon Orleans Hotel.rvt

TRAPOLIN**PEER**
ARCHITECTS

CONSTRUCTION DOCUMENTS

BOURBON ORLEANS HOTEL
RENOVATION
717 ORLEANS AVE
NEW ORLEANS, LA 70116

OWNER
DiamondRock Hospitality
2 Bethesda Metro Center, Suite 1400
Bethesda, MD 20814
(206) 930-9956

ARCHITECT
TRAPOLIN-PEER
850 TCHOUPITOULAS ST.
NEW ORLEANS, LA 70130
(504) 523-2772
www.trapolinpeer.com

CONTRACTOR
CONTRACTOR NAME
Address
City, State Zip
(area code) number

REVISION #	DESCRIPTION	DATE
1	PROGRESS SET	06/03/2022
2	PRICING SET	06/24/2022
3	PERMIT SET	06/27/2022

FINAL PERMIT RELEASE
DEPARTMENT OF SAFETY AND PERMITS
PLAN REVIEW DIVISION
These plans and specifications have been reviewed and are accepted as complying with the provisions of the Code of Ordinances of the City of New Orleans, has been noted. This action is contingent upon compliance with all applicable codes and laws during the construction and that inspections upon completion.
Plan Review Supervisor
Any changes to or deviations from approved plans must be submitted to the Plan Review Division for approval before work on that work does stop until the revised plans have been examined and approved.
Work beyond that which is shown on these approved drawings is not authorized. Performing work beyond the scope of these plans is a violation of the Code of Ordinances of the City of New Orleans. Amendments to the International Building Code under revisions of the building permit.
Plan Review Supervisor
REVIEW FOR CODE COMPLIANCE
wiejones 11/03/2022

© TRAPOLIN-PEER ARCHITECTS, APC

PROJECT NUMBER
CN 22174

ISSUE DATE
06/27/2022

LEVEL 02 - FLOOR PLAN

A2.02

6/24/2022 4:45:48 PM

GENERAL NOTES

1. THE GENERAL CONTRACTOR IS RESPONSIBLE TO SUPPLY ALL SUBCONTRACTORS WITH CONSTRUCTION DRAWINGS AND SPECIFICATIONS NECESSARY TO BID AND/OR CONSTRUCT THIS PROJECT.
2. THE CONTRACTOR IS RESPONSIBLE FOR NOTIFYING THE ARCHITECT OF ANY ERRORS, OMISSIONS, OR DISCREPANCIES PRIOR TO MAKING ANY CHANGES TO THE CONSTRUCTION DRAWINGS. SHOULD INCONSISTENCIES OR DISCREPANCIES OCCUR, THE BETTER QUALITY, GREATER QUANTITY, AND MOST EXPENSIVE PRODUCT OR TASK SHALL BE PERFORMED OR FURNISHED UNLESS INSTRUCTED OTHERWISE BY THE ARCHITECT. DISCREPANCIES BETWEEN INSTALLATION METHODS FOR SPECIFIED ITEMS SHALL NOT BE CAUSE TO CHANGE THE CONTRACT SUM OR DELAY THE CONSTRUCTION.
3. THE GENERAL CONTRACTOR SHALL VISIT THE JOB SITE TO INSPECT THE BALCONY AND ENTRY GALLERY IN THEIR ENTIRETY TO BECOME ACQUAINTED WITH THE JOB CONDITIONS AND SHALL CAREFULLY STUDY ALL DRAWINGS AND SPECIFICATIONS PERTAINING TO THE WORK. THE CONTRACTOR SHALL BE REQUIRED TO DO A COMPLETE AND THOROUGH WALK OF THE GALLERY TO DOCUMENT ALL CONDITIONS AND EXTENT OF EACH SCOPE PRIOR TO SUBMITTING A BID.
4. THE CONTRACTOR SHALL OBTAIN AND PAY FOR ALL REQUIRED PERMITS, ARRANGE FOR ALL REQUIRED INSPECTIONS, TEMPORARY TELEPHONE, TEMPORARY WASTE, AND TRASH REMOVAL.
5. DO NOT SCALE DRAWINGS. ALL +/- DIMENSIONS ARE FOR REFERENCES OF EXISTING ELEMENTS ONLY. CONTRACTOR SHALL VERIFY ALL CONDITIONS AND DIMENSIONS AT JOB SITE. IF ANY DISCREPANCIES ARE FOUND, THE ARCHITECT SHALL BE NOTIFIED IMMEDIATELY FOR CLARIFICATION.
6. GENERAL CONTRACTOR SHALL BE RESPONSIBLE FOR VERIFICATIONS AND COORDINATION OF SUBCONTRACTORS WORK, TO SECURE COMPLIANCE TO THE CONSTRUCTION DOCUMENTS
7. VARIANCES OF ACTUAL EXISTING SITE CONDITIONS FROM THOSE ILLUSTRATED ON THESE DRAWINGS MAY OCCUR. THE GENERAL CONTRACTOR SHALL VERIFY EXISTING CONDITIONS PRIOR TO COMMENCING WORK AND REPORT ANY AND ALL DISCREPANCIES TO THE ARCHITECT.
8. THE ENTIRE HOTEL AND EXISTING SECOND FLOOR KITCHEN WILL BE IN OPERATION THROUGH THE DURATION OF THE PROJECT. PROVIDE TEMPORARY WALLS, CEILINGS AND SHORING AS NEEDED TO MAINTAIN OPERATION AND CONSTRUCTION SIMULTANEOUSLY
9. ARCHITECTURAL DETAILS ARE PROVIDED INDICATING MEASUREMENTS THAT MUST MAINTAINED AND THAT MUST BE FIELD VERIFIED, BY GENERAL CONTRACTOR. THESE DETAILS ARE INTENDED TO BE USED AS REFERENCE WHEN INSTALLING THE NEW PORTIONS OF WORK.
10. THIS SCOPE OF WORK IS TO INCLUDE ALL DEMOLITION, SHORING AND STEEL INSTALLATION. IT IS THE GENERAL CONTRACTOR'S RESPONSIBILITY TO PROVIDE FIRE WATCH TO REVIEW WELDING THROUGHOUT THE DURATION OF CONSTRUCTION.
11. PROTECT ALL AREAS OF EXISTING BUILDING THAT IS NOT IS SCOPE DURING CONSTRUCTION. THE GENERAL CONTRACTOR IS RESPONSIBLE FOR REPAIRING ANY DAMAGES CAUSED BY THEIR CONSTRUCTION.
12. ALL DIMENSIONS ARE TO BE FIELD VERIFIED (V.I.F.)
13. EXISTING BEAM CONDITION B/T COLUMNS (AT ENTRY GALLERY) IS TO BE VERIFIED BY CONTRACTOR PRIOR TO PROVIDING FINAL PRICING
14. THE ENTIRE BALCONY AND ENTRY GALLERY IS TO BE PAINTED AFTER THE BEAMS REPAIRS ARE COMPLETE. THIS INCLUDES ALL NEW/EXISTING PURLINS, ALL NEW/EXISTING, ALL NEW AND EXISTING STUCCO CORNICES AND ALL NEW/EXISTING EXTERIOR ARCHITECTURAL MILLWORK; RAILS, INTERMEDIATE RAILS AND BALUSTERS. CLEAN, SAND AND PRIME PRIOR TO PAINTING.
15. IT IS THE GENERAL CONTRACTORS RESPONSIBILITY TO CONTACT THE VIEUX CARRE STAFF (VCC) PRIOR TO STARTING PAINTING. A PAINTING PERMIT IS REQUIRED FROM THE AUTHORITY HAVING JURISDICTION (AHJ) PRIOR TO STARTING WORK.

DEMOLITION / REPAIR NOTES:

1. SALVAGE ALL PORTIONS OF THE EXISTING WOOD RAILING (BALUSTER, RAILS & INTERMEDIATE RAILS) TO BE REUSED FOR REPLICATION OF NEW WOOD RAILING COMPONENTS
2. SALVAGE EXISTING WOOD RAILING TO THE GREATEST EXTENT POSSIBLE TO BE REUSED AS THE NEW RAILING. DO NOT REUSE ANY ROTTEN OR DAMAGED MILLWORK.
3. PROTECT EXISTING STUCCO CORNICE THROUGHOUT CONSTRUCTION. DEMOLISH EXISTING CORNICE AS NEEDED TO INSTALL NEW METAL OUTRIGGERS.
4. THE CONTRACTOR IS RESPONSIBLE FOR THE REMOVAL AND REINSTALLATION OF ALL EXISTING ELECTRICAL FIXTURES AND ASSOCIATED CONDUIT. THESE FIXTURES WILL NEED TO BE RELOCATED TO PERFORM THE REPAIRS.
5. MODIFICATIONS TO THE MASONRY WALL IS REQUIRED TO PERFORM REPAIRS. IT IS THE GENERAL CONTRACTORS RESPONSIBILITY TO PERFORM DEMOLITION AND REPAIRS TO MASONRY WALL AS REQUIRED TO COMPLETE THE ENTIRE SCOPE OF WORK
6. CONTRACTOR IS RESPONSIBLE FOR SURVEYING THE EXISTING CONDITIONS AND SHALL BE INCLUDED IN THIS WORK IN THE BASE PRICE.
7. IT IS THE GENERAL CONTRACTORS RESPONSIBILITY TO PROVIDE ALL TEMPORARY SHORING NEEDED TO PERFORM DEMOLITION (AND REPAIRS) TO THE ENTIRE BALCONY AND GALLERY ENTRY UNTIL ALL WORK IS COMPLETE.

EXTERIOR WOOD / EXTERIOR ARCHITECTURAL MILLWORK :

1. NEW PRESSURE TREATED GRADE #1 T&G DECKING IS TO BE INSTALLED ON THE ENTIRE BALCONY AND ENTRY GALLERY.
2. ALL MILLWORK NOTED IN THE DOCUMENTS AS EXTERIOR ARCHITECTURAL MILLWORK IS TO BE RED GRANDIS OR EQUAL (APPROVALS ARE REQUIRED BY ARCHITECT.) ALL EXTERIOR ARCHITECTURAL MILLWORK IS TO BE PRIMED ON ALL SIDES PRIOR TO INSTALLATION.
3. OTHER EXTERIOR MILLWORK NOT NOTED AS EXTERIOR ARCHITECTURAL MILLWORK IS TO BE PRESSURE TREATED GRADE #1 LUMBER.

METAL :

1. ALL NEW STEEL IS TO BE GALVANIZED HDG (HOT DIPPED GALVANIZED.)
2. ALL NEW / EXISTING STEEL IS TO BE CLEAN, PRIMED AND PAINTED.
3. ALL METAL FLASHING IS TO BE COPPER, UNLESS OTHERWISE NOTED.

1 A3.01 BUILDING ELEVATION - ORLEANS ST
SCALE: 3/16" = 1'-0"

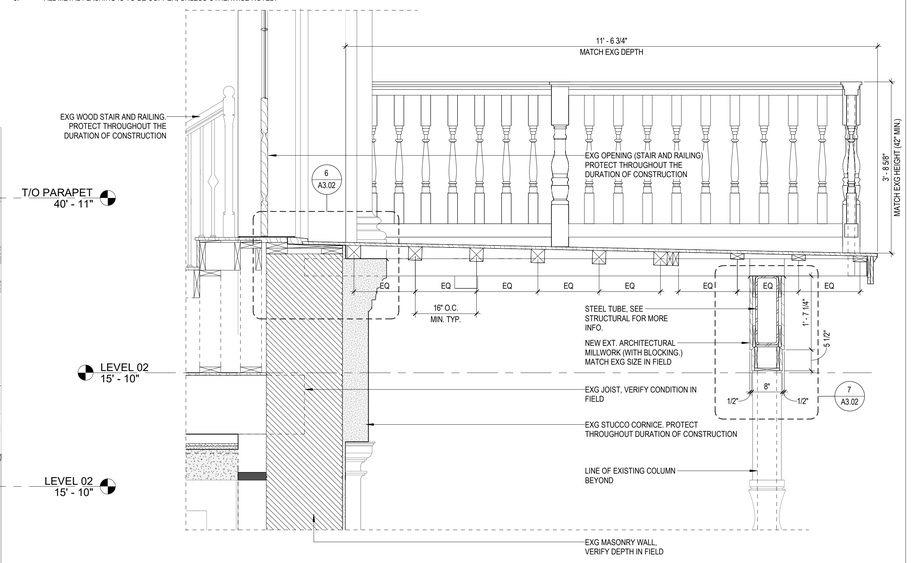

3 A3.01 BALCONY SECTION 1
SCALE: 3/4" = 1'-0"

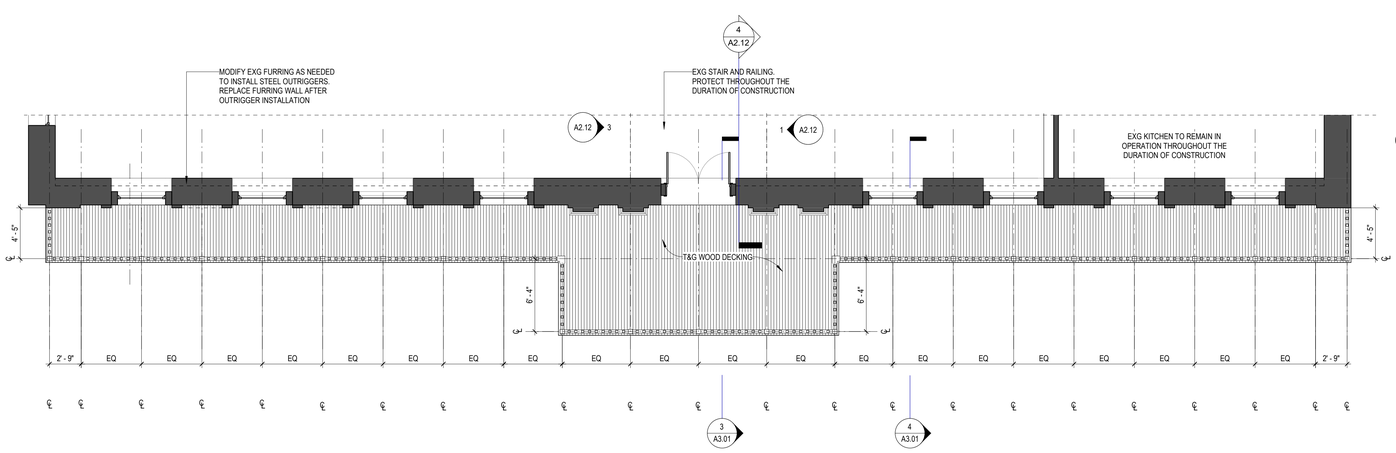

2 A3.01 ENLARGED PLAN - BALCONY
SCALE: 3/16" = 1'-0"

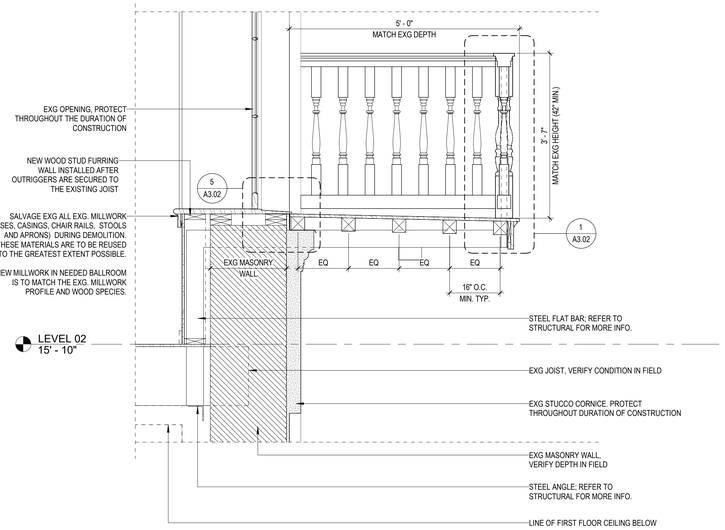

4 A3.01 BALCONY SECTION 2
SCALE: 3/4" = 1'-0"

TRAPOLINPEER
ARCHITECTS

CONSTRUCTION DOCUMENTS

BOURBON ORLEANS HOTEL
RENOVATION
717 ORLEANS AVE.
NEW ORLEANS, LA 70116

OWNER
DiamondRock Hospitality
2 Bethesda Metro Center, Suite 1400
Bethesda, MD 20814
(206) 930-9956

ARCHITECT
TRAPOLIN-PEER
850 TCHOUPITOULAS ST.
NEW ORLEANS, LA 70130
(504) 523-2772
www.trapolinpeer.com

CONTRACTOR
CONTRACTOR NAME
Address
City, State Zip
(area code) number

REVISION #	DESCRIPTION	DATE
1	PROGRESS SET	05/03/2022
2	PRICING SET	06/24/2022
3	PERMIT SET	06/27/2022

FINAL PERMIT RELEASE
DEPARTMENT OF SAFETY AND PERMITS
PLAN REVIEW DIVISION
These plans and specifications have been examined and to evidence that they comply with the provisions of the Code of Ordinances of the City of New Orleans, has been noted. This above is contingent upon the plans and specifications being in accordance with construction and final inspection upon completion.
Plan review is based on information as noted.
Any changes to or deviations from approved plans must be submitted for review and approval prior to construction of work and must stay until the revised plans have been examined and approved.
Work beyond that which is specified in these approved drawings is not authorized. Performing work beyond the scope of these plans is subject to a stop work order and a fine of $500 per day, pursuant to amendments to the International Building Code and/or revocation of the building permit.
Chief Plans Examiner
REVIEWED FOR CODE COMPLIANCE
waejones 11/03/2022

© TRAPOLIN-PEER ARCHITECTS, APC

PROJECT NUMBER
CN 22174

ISSUE DATE
06/27/2022

BALCONY

A3.01

Autodesk Docs://22-22174 - Bourbon Orleans Hotel/CN22174 Bourbon Orleans Hotel.rvt

6/24/2022 4:45:51 PM

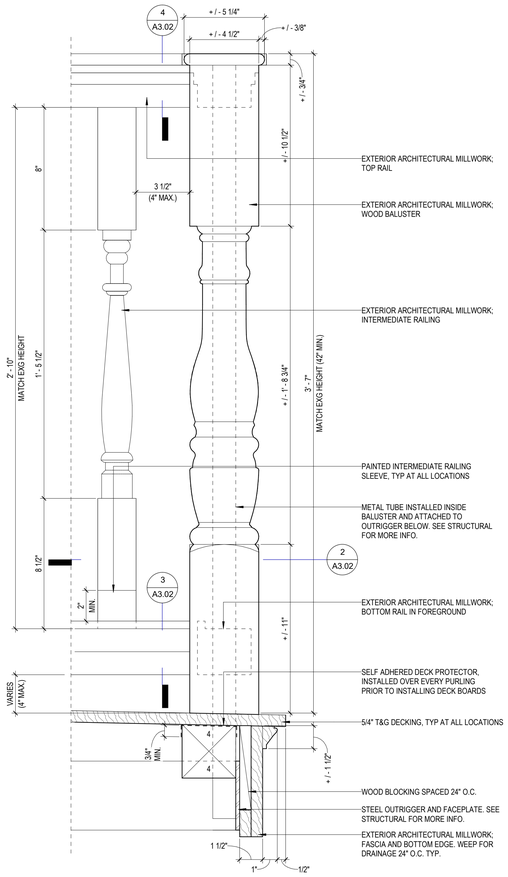

1 A3.02 ELEVATION - TYP BALUSTER & RAIL
SCALE: 3" = 1'-0"

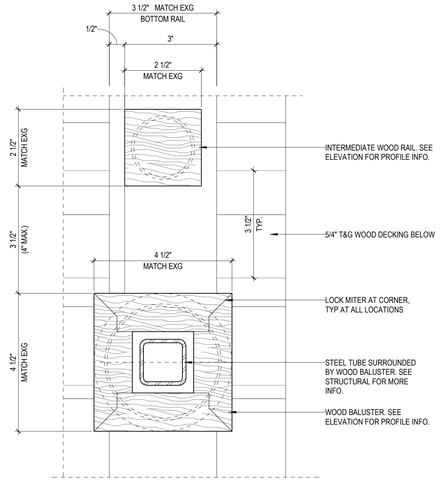

2 A3.02 PLAN DETAIL - BALUSTER & RAIL
SCALE: 6" = 1'-0"

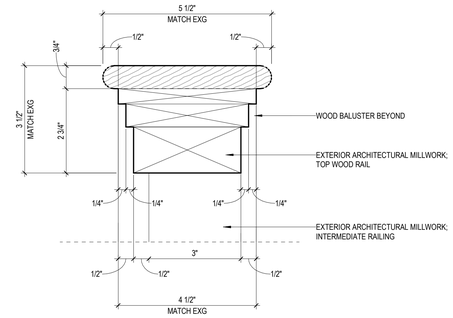

4 A3.02 SECTION DETAIL - TOP RAIL
SCALE: 6" = 1'-0"

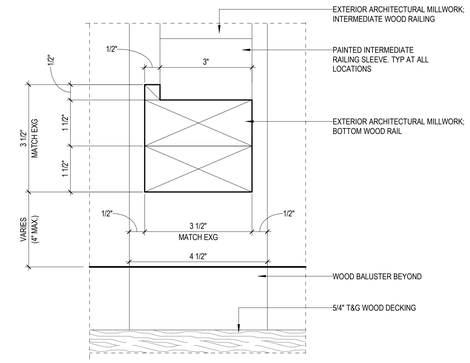

3 A3.02 SECTION DETAIL - BOTTOM RAIL
SCALE: 6" = 1'-0"

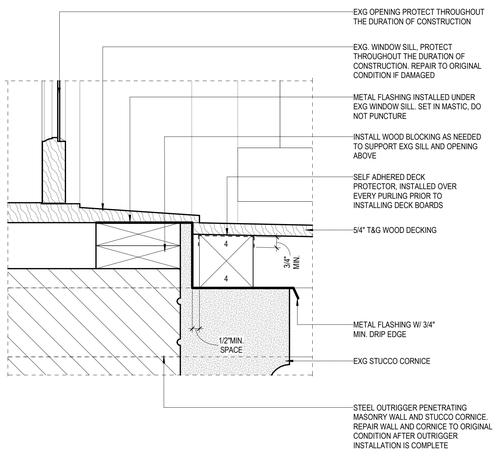

5 A3.02 SECTION DETAIL - WINDOW SILL
SCALE: 3" = 1'-0"

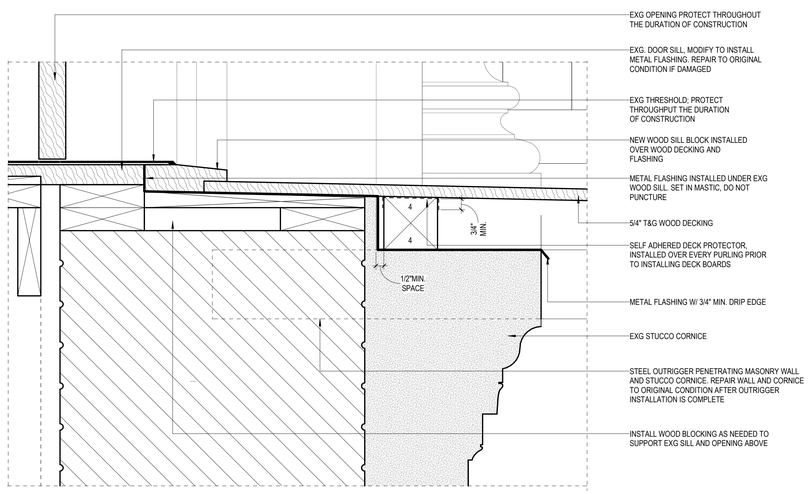

6 A3.02 SECTION DETAIL - DOOR SILL
SCALE: 3" = 1'-0"

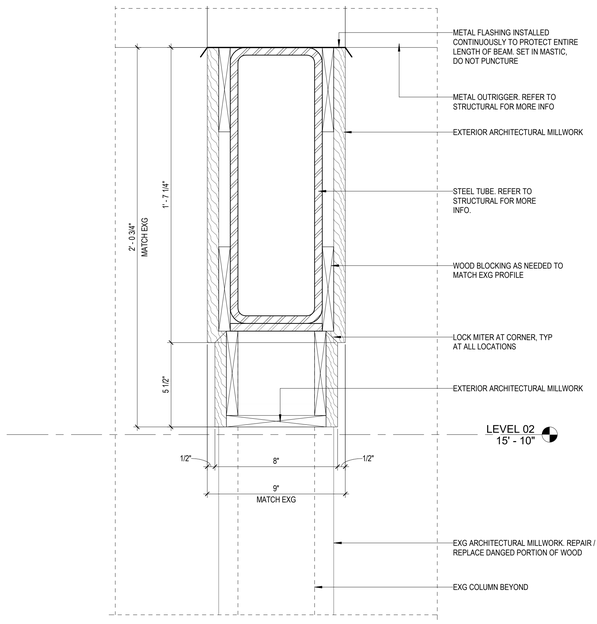

7 A3.02 SECTION DETAIL - GALLERY BEAM
SCALE: 3" = 1'-0"

Autodesk Docs://22-22174 - Bourbon Orleans Hotel/CN22174 Bourbon Orleans Hotel.rvt

TRAPOLINPEER
ARCHITECTS

CONSTRUCTION DOCUMENTS

BOURBON ORLEANS HOTEL RENOVATION
717 ORLEANS AVE.
NEW ORLEANS, LA 70116

OWNER
DiamondRock Hospitality
2 Bethesda Metro Center, Suite 1400
Bethesda, MD 20814
(206) 930-9956

ARCHITECT
TRAPOLIN-PEER
850 TCHOUPITOULAS ST.
NEW ORLEANS, LA 70130
(504) 523-2772
www.trapolinpeer.com

CONTRACTOR
CONTRACTOR NAME
Address
City, State Zip
(area code) number

PAULA MAY PEER
REG. NO. 1298
STATE OF LOUISIANA
REGISTERED ARCHITECT

REVISION #	DESCRIPTION	DATE
1	PROGRESS SET	06/03/2022
2	PRICING SET	06/24/2022
3	PERMIT SET	06/27/2022

FINAL PERMIT RELEASE

DEPARTMENT OF SAFETY AND PERMITS
PLAN REVIEW DIVISION

These plans and specifications have been scanned and as evidence of the fact that they have been reviewed and found to be in compliance with the City of New Orleans, law never noted. This action is contingent upon installation and work complying with the code during the entire period of construction.
Minor changes made from sets of plans are not acceptable.
Any changes made from sets of plans must be immediately reported to the Department of Safety and Permits and work must stop until the changes have been examined and approved.
Work beyond that which is specified in these approved drawings is not authorized by this permit. Such work may be required to be subject to fines as prescribed in Section 108.1 of the New Orleans Residential Code. Such fines may be assessed for each day after the inspection period.

Jay P. Nelson, Jr.
Director
Safety & Permits Department

REVIEWED FOR CODE COMPLIANCE

waejones 11/03/2022

© TRAPOLIN-PEER ARCHITECTS, APC

PROJECT NUMBER
CN 22174

ISSUE DATE
06/27/2022

BALCONY

A3.02

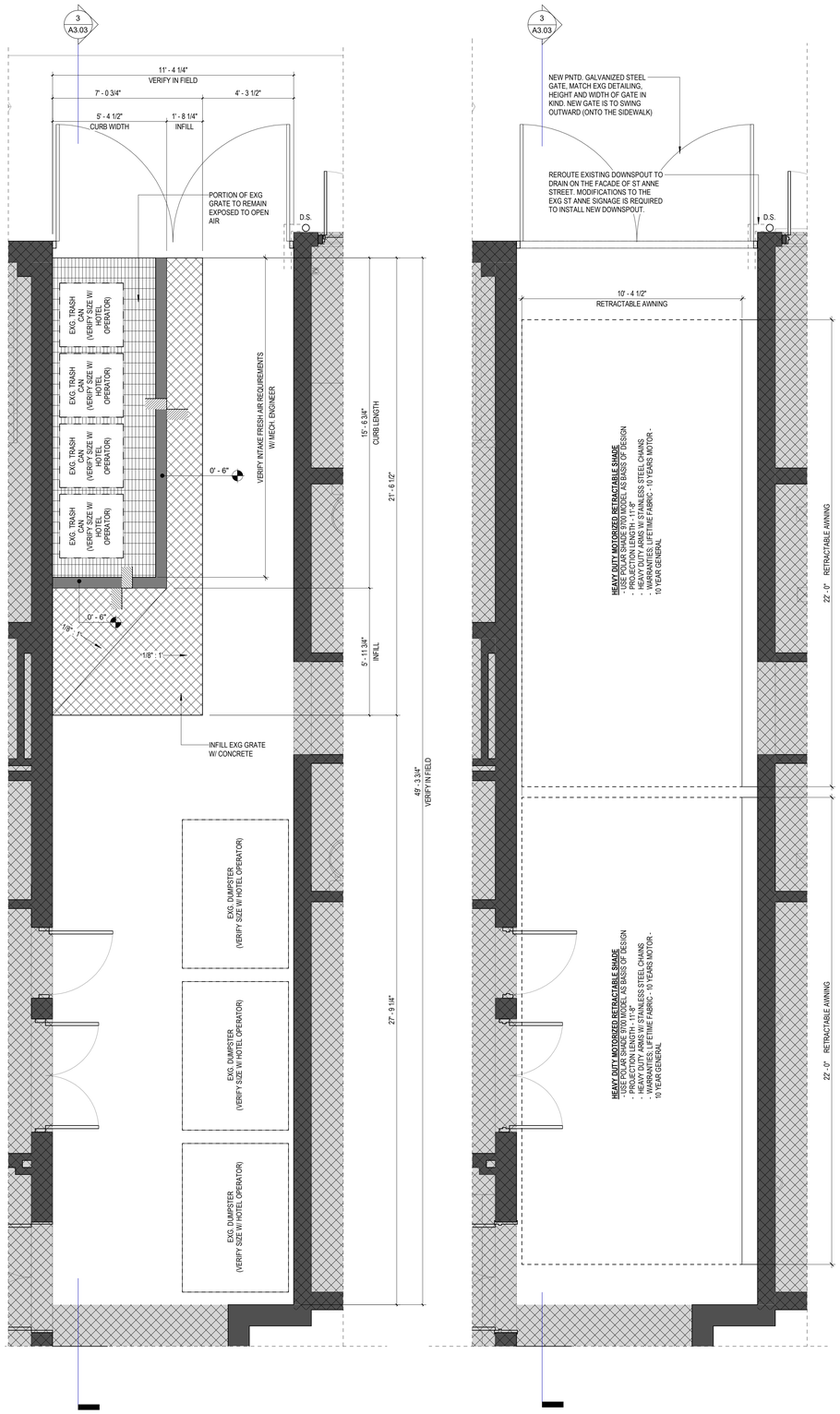

1 A3.03 ENLARGED PLAN - ST ANN ALLEY
SCALE: 3/8" = 1'-0"

2 A3.03 ENLARGED RCP - ST ANN ALLEY
SCALE: 3/8" = 1'-0"

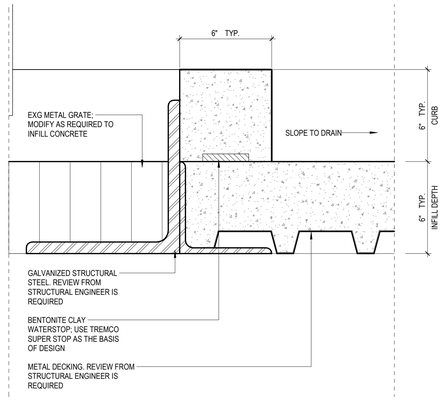

5 A3.03 DETAIL - INFILL / CURB
SCALE: 3" = 1'-0"

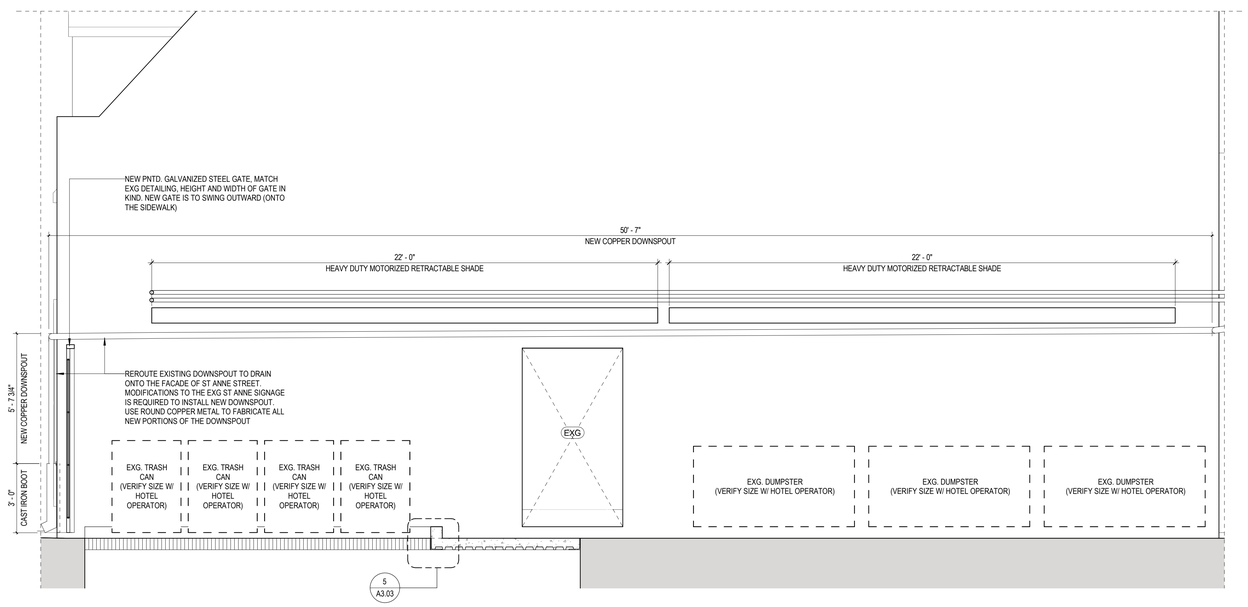

3 A3.03 SECTION - ST ANN ALLEY
SCALE: 3/8" = 1'-0"

SLAB LEGEND

- EXISTING
- INFILL PORTION OF CONCRETE FLOOR (3000 PSI / 6" MIN THICKNESS) DOWEL NEW PORTIONS OF CONCRETE FLOOR INTO EXG SLAB
- NEW CONCRETE CURB W/ BEVELED EDGES. SEE DRAWING FOR SIZE AND ADDITIONAL INFORMATION
- CHANGE IN ELEVATION

ALLEY GENERAL NOTES

1. SLOPE CONCRETE TO ALL FLOOR DRAINS AT 1/8" / 12" MIN.; REFERENCE PLAN FOR EXTENTS OF SLOPE.
2. COPPER DOWNSPOUTS TO INCLUDE OVERFLOWS LOCATED 6'-0" ABOVE EXTERIOR GRADE.
3. ALL NEW STEEL STRUCTURE IS REQUIRED TO BE GALVANIZED (HDG)
4. IT IS THE GENERAL CONTRACTORS RESPONSIBILITY TO VERIFY ALL CONDITIONS IN FIELD PRIOR TO EXECUTING WORK
5. VERIFY BASEMENT SUPPLY REQUIREMENTS W/ THE MECH ENGINEER PRIOR TO ENCLOSING ANY PORTION OF THE EXTERIOR GRATE.
6. VERIFY CONCRETE INFILL DETAILING W/ A LICENSED STRUCTURAL ENGINEER
7. REVIEW AND APPROVAL FROM THE VCC IS REQUIRED PRIOR TO PERFORMING ANY EXTERIOR WORK

TRAPOLINPEER
ARCHITECTS

CONSTRUCTION DOCUMENTS

BOURBON ORLEANS HOTEL
RENOVATION
717 ORLEANS AVE.
NEW ORLEANS, LA 70116

OWNER
DiamondRock Hospitality
2 Bethesda Metro Center, Suite 1400
Bethesda, MD 20814
(206) 930-9956

ARCHITECT
TRAPOLIN-PEER
850 TCHOUPITOULAS ST.
NEW ORLEANS, LA 70130
(504) 523-2772
www.trapolinpeer.com

CONTRACTOR
CONTRACTOR NAME
Address
City, State Zip
(area code) number

PAULA MAY PEER
REG. NO. 12396
STATE OF LOUISIANA
REGISTERED ARCHITECT

REVISION #	DESCRIPTION	DATE
1	PROGRESS SET	06/03/2022
2	PRICING SET	06/24/2022
3	PERMIT SET	06/27/2022

FINAL PERMIT RELEASE

DEPARTMENT OF SAFETY AND PERMITS
PLAN REVIEW DIVISION

These plans and specifications have been examined and no evidence of violation of the International Building Code (IBC), as amended by the City of New Orleans, has been noted. This action is contingent upon the accuracy of the information provided by the applicant, construction and final inspection cannot completely verify compliance with the IBC.

Any changes to or deviations from approved plans must be immediately reported to the Department of Safety and Permits and work must stop until the revisions have been examined and approved.

Work beyond that which is specified in these approved drawings is prohibited. Any deviations from approved drawings are subject to fines for violations in accordance with the Code of New Orleans. Approval of these plans does not authorize the performance of the building permit.

Chief Plan Examiner
Chief Building Official
Director, Permit Center

REVIEW FOR CODE COMPLIANCE

waejones 11/03/2022

© TRAPOLIN-PEER ARCHITECTS, APC

PROJECT NUMBER
CN 22174

ISSUE DATE
06/27/2022

ST ANN ALLEY

A3.03

6/24/2022 4:45:52 PM
Autodesk Docs://22-22174 - Bourbon Orleans Hotel/CN22174 Bourbon Orleans Hotel.rvt

GENERAL STRUCTURAL NOTES

I. GENERAL

A. Contractor Responsibility - Construction documents represent the finished structure. Contractor is responsible for construction means, methods, sequences and safety precautions, including but not limited to shoring and temporary bracing.

B. Omissions & Conflicts - Omissions or conflicts between various elements of the construction documents should be brought to the attention of the design team. If certain features are not fully delineated in the construction documents, their construction shall be of the same character as for similar conditions that are delineated.

C. Existing Conditions - The Contractor shall verify the existing conditions and dimensions in the field. The Contractor shall report any discrepancies between the drawings and the actual existing conditions and dimensions to the Engineer.

II. DESIGN BASIS

A. Applicable Codes and Standards
International Building Code 2015
ASCE 7-2010

B. Design Loads

Balcony and Gallery

Live Load 100 psf
Dead Load 7 psf

Wind Load

The criteria is based on ASCE 7-2010 Minimum Design Loads for Buildings and Other Structures:

Basic Wind Velocity	143 mph
Risk Category	II
Exposure	B

III. MATERIALS

A. STRUCTURAL STEEL

All detailing, fabrication and erection of structural steel shall conform to AISC Specification for the Design, Fabrication and Erection of Structural Steel for Buildings, the AWS D1.1 Structural Welding Code and meet the following requirements:

Wide Flange Shapes: ASTM A992, yield strength 50 ksi.
Steel Channels, Angles, Rods and Plates: ASTM A 36, yield strength 36 ksi except where noted otherwise in sections.
Tube - ASTM A500 Grade B.
Pipe - ASTM A53 Grade B.
High Strength Bolts - ASTM A325N
Welding Materials - E70XX.

All structural steel shall be hot dipped galvanized.

All welding by certified welders and in accordance with AWS D1.1, structural welding code. All electrodes used for submerged arc and shielded metal arc welding shall be compatible with the structural steel as specified in AWS and AISC.

B. WOOD FRAMING

All wood framing fabrication and erection shall conform to the National Design Specification for Wood Construction by the NFPA, the Plywood Design Specification by the APA and meet the requirements below. Unless noted otherwise all wood connections shall be in accordance with the fastening schedule of the International Residential Code. All lumber in contact with concrete or masonry shall be treated:

Framing Lumber - Southern Yellow Pine, S4S, No. 2, maximum moisture content 19%.

IV. MISCELLANEOUS

1. No change in size or dimension of structural members shall be made without the written approval of the professional of record.
2. The contractor is responsible for limiting the amount of construction load imposed upon structural framing. Construction loads shall not exceed the design capacity of the framing at the time the loads are imposed.
3. The structure is designed to function as a unit upon completion. The contractor is responsible for furnishing all temporary bracing and/or support that may be required as the result of the contractor's construction methods and/or sequences.
4. Do not scale these drawings, use dimensions.
5. The contractor shall inform the professional of record in writing of any deviation from the contract documents. The contractor shall not be relieved of the responsibility of such deviation by the professional of record review of shop drawings, product data, etc., unless the contractor has specifically informed the professional of record of such deviation at the time of submission, and the professional of record has given written approval to the specific deviation.

V. QUALITY CONTROL

A. The following work requires tests and/or inspections for specific requirements see specification.

1. Structural Steel Welding and Bolts

B. A partial listing of required structural submittals follows. Consult the specification for a complete listing of submittal requirements.

1. Structural Steel

C. No work shall be done without testing laboratory/inspectors knowledge.

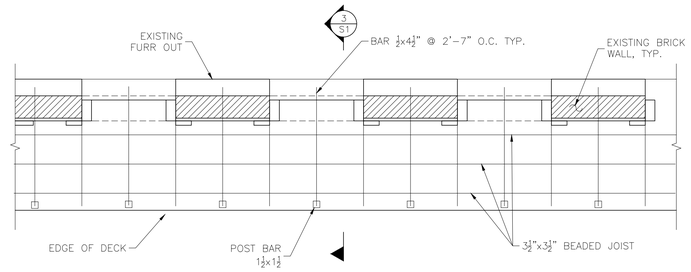

1 S1 BALCONY PLAN
1/4" = 1'-0"

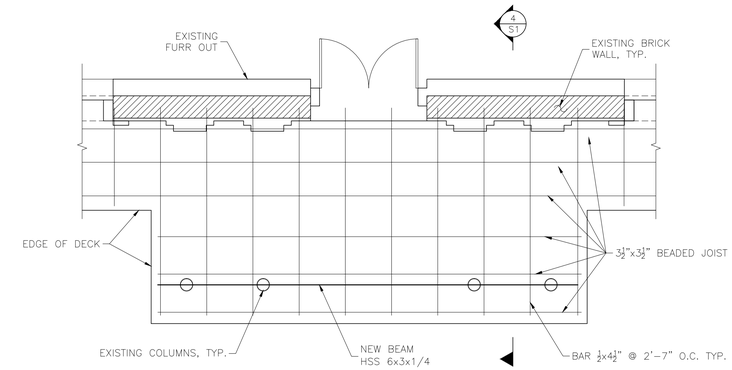

2 S1 GALLERY PLAN
1/4" = 1'-0"

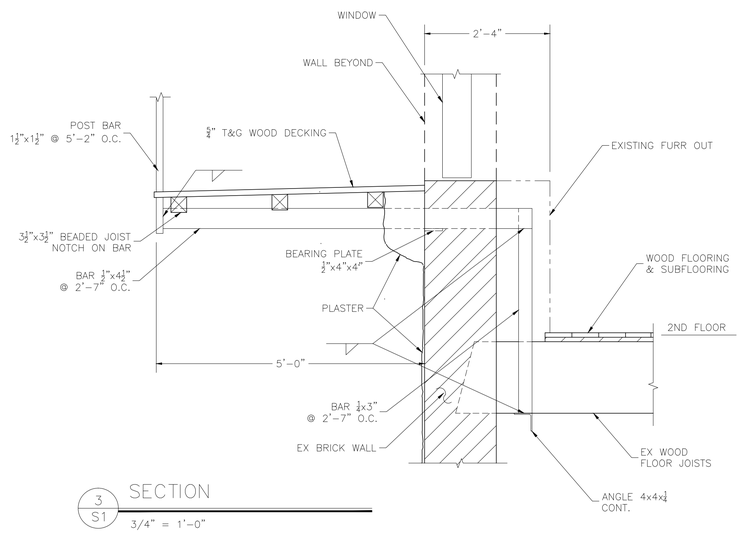

3 S1 SECTION
3/4" = 1'-0"

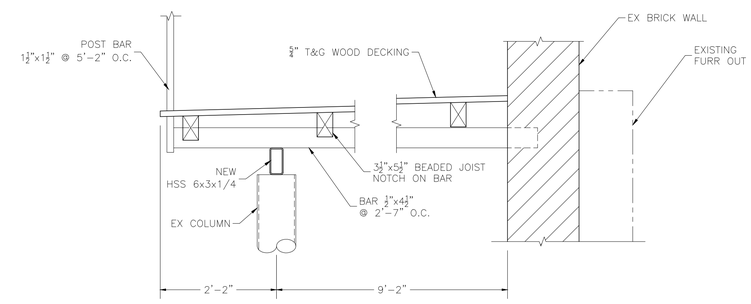

4 S1 SECTION
3/4" = 1'-0"

REVISIONS:

STATE OF LOUISIANA
JOHN C. BOSE
Reg. No. 18581
Registered Professional Engineer in CIVIL ENGINEERING

John C. Bose

JOHN C. BOSE, CONSULTING ENGINEER
A PROFESSIONAL LIMITED LIABILITY COMPANY
2113 OCTAVIA STREET
NEW ORLEANS, LOUISIANA 70115
(504) 866-9941

BALCONY REPAIR
BOURBON ORLEANS HOTEL
717 ORLEANS STREET
NEW ORLEANS, LA

Date:	6/24/22
Scale:	AS NOTED
Drafted:	HVG
Job No.	3648

S1

1 of 1