ALL CHANGES OR ADDITIONAL WORK MUST BE APPROVED BY THE HDLC

GENERAL NOTES

1. PROVIDE POWER PER SIGN MANUFACTURER REQUIREMENTS.
2. PROVIDE BACKING AS NEEDED.
3. STRUCTURAL DETAILS AND CONNECTIONS BY OTHERS.
4. SIGN PERMITTING BY OTHERS.
5. SIGN MANUFACTURE TO CONFIRM THAT ALL SIGNS COMPLY TO LOCAL CODES AND REGULATIONS.

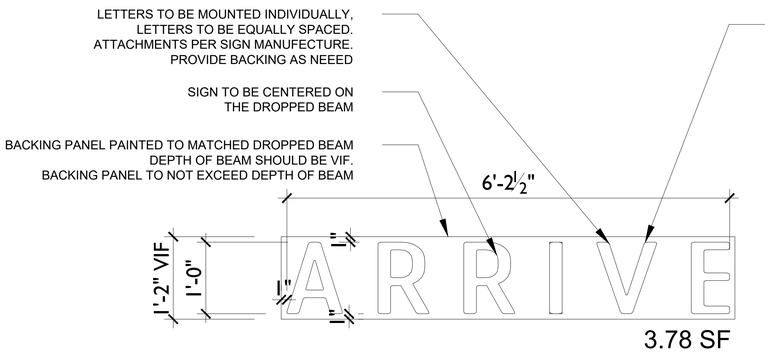

FRONT VIEW

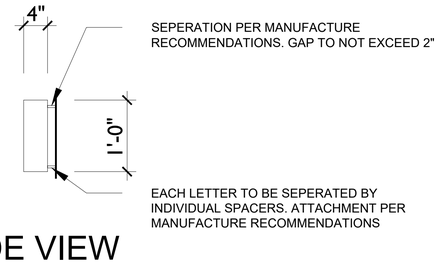

SIDE VIEW

FONT: CERVO NEUE

SCREENSHOT

N.T.S

SCREENSHOT

N.T.S

ARRIVE MAIN SIGN

SCALE: 3/4"=1'-0"

MAZANT ELEVATION

SCALE: 1/8"=1'-0"

CHRIS PARDO DESIGN
ELEMENTAL ARCHITECTURE

ARRIVE HOTEL
600 Mazant Street
New Orleans, LA 70117

Date:
Issue Purpose:
Revisions

CONSTRUCTION DOCUMENTS

SIGNAGE

22 December 2020

IDSK1.0

© 2020 studioWTA

ALL CHANGES OR ADDITIONAL WORK MUST BE APPROVED BY THE HDLC

GENERAL NOTES

1. PROVIDE POWER PER SIGN MANUFACTURER REQUIREMENTS.
2. PROVIDE BACKING AS NEEDED.
3. STRUCTURAL DETAILS AND CONNECTIONS BY OTHERS.
4. SIGN PERMITTING BY OTHERS.
5. ALL SIGNS TO COMPLY TO LOCAL CODES AND REGULATIONS.

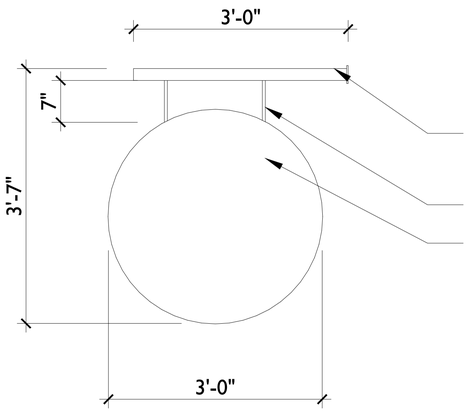

2x2 STEEL TUBE
ATTACHED TO WALL. CONCEALED CONNECTION

½" STEEL RODS

ALUMINUM DOUBLE SIDED SIGN W/ ROUTED LETTERS AND GRAPHICS. PROVIDE WHITE TRANSLUCENT PLEXYGLASS SHEET BEHIND THE LETTERS.

FRONT VIEW

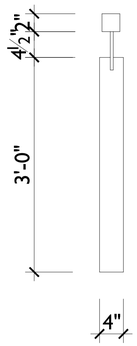

SIDE VIEW

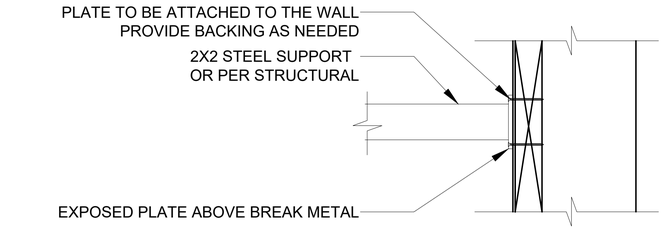

DETAIL @ WALL

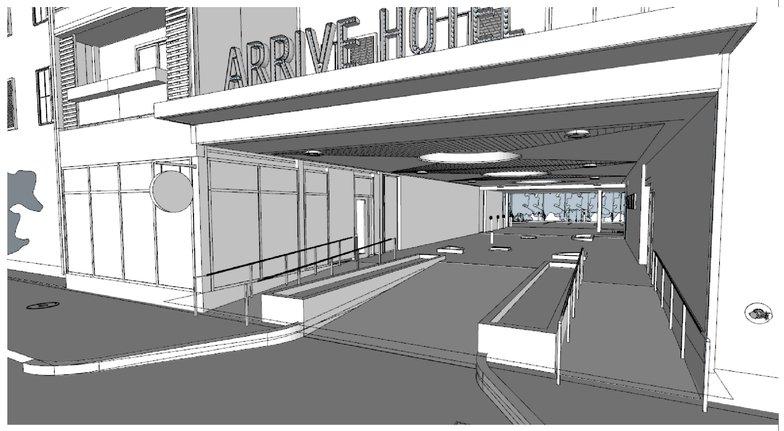

SCREENSHOT

N.T.S

ALUMINUM DOUBLE SIDED SIGN W/ ROUTED LETTERS AND GRAPHICS. PROVIDE WHITE TRANSLUCENT PLEXYGLASS SHEET BEHIND THE LETTERS TO ALLOW INTERIOR LIGHT

NOTE: ALL THE BLACK SURFACES TO BE SOLID
ONLY THE WHITE AREAS WILL BE ILLUMINATED
PROVIDE POWER AS NEEDED PER SIGN MANUFACTURER REQUIREMENTS

SIGN RENDERING

ARRIVE COFFEE SHOP SIGN

SCALE: 1"=1'-0"

MAZANT ELEVATION

SCALE: 1/8"=1'-0"

CHRIS PARDO DESIGN
ELEMENTAL ARCHITECTURE

ARRIVE HOTEL
600 Mazant Street
New Orleans, LA 70117

Date:
Issue Purpose:
Revisions

CONSTRUCTION DOCUMENTS

SIGNAGE

22 December 2020

IDSK1.1

© 2020 studioWTA

ALL CHANGES OR ADDITIONAL WORK MUST BE APPROVED BY THE HDLC

GENERAL NOTES

1. PROVIDE POWER PER SIGN MANUFACTURER REQUIREMENTS.
2. PROVIDE BACKING AS NEEDED.
3. STRUCTURAL DETAILS AND CONNECTIONS BY OTHERS.
4. SIGN PERMITTING BY OTHERS.
5. ALL SIGNS TO COMPLY TO LOCAL CODES AND REGULATIONS.

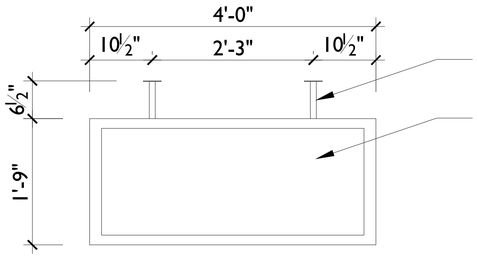

FRONT VIEW

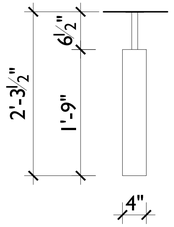

SIDE VIEW

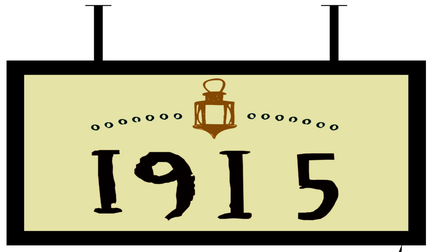

RENDERING
N.T.S

NOTE: ALL THE BLACK SURFACES TO BE SOLID LIGHTING BY OTHERS. PROVIDE POWER PER SIGN MANUFACTURER REQUIREMENT

BAR SIGN

SCALE: 1"=1'-0"

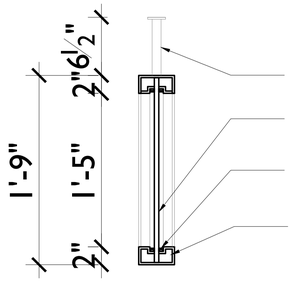

BAR SIGN SECTION

SCALE: 3"=1'-0"

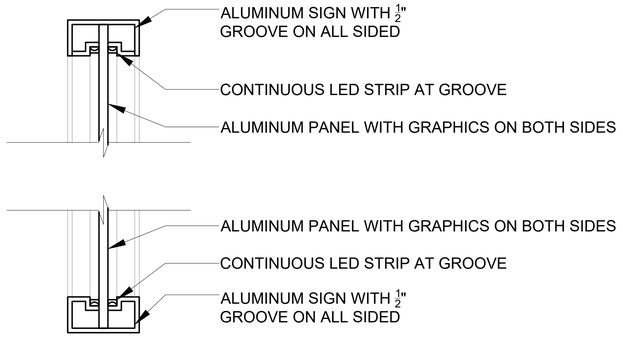

BAR SIGN DETAILS

SCALE: 3"=1'-0"

SCREENSHOT

N.T.S

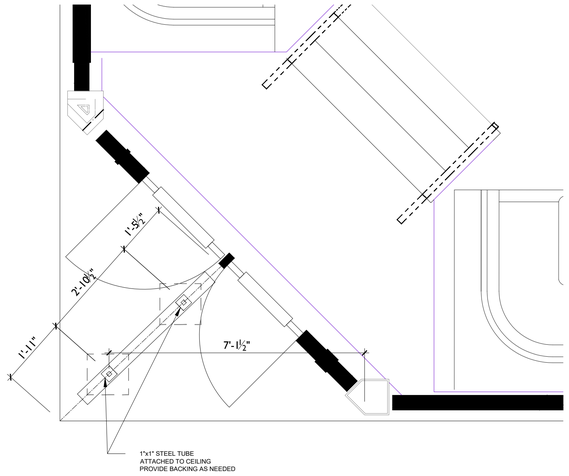

CEILING PLAN

SCALE: ½"=1'-0"

MAZANT ELEVATION

SCALE: 1/8"=1'-0"

CHRIS PARDO DESIGN
ELEMENTAL ARCHITECTURE

ARRIVE HOTEL
600 Mazant Street
New Orleans, LA 70117

Date:
Issue Purpose:
Revisions

CONSTRUCTION DOCUMENTS

SIGNAGE

22 December 2020

IDSK1.2

© 2020 studioWTA

ALL CHANGES OR ADDITIONAL WORK MUST BE APPROVED BY THE HDLC

GENERAL NOTES

1. PROVIDE POWER PER SIGN MANUFACTURER REQUIREMENTS.
2. PROVIDE BACKING AS NEEDED.
3. STRUCTURAL DETAILS AND CONNECTIONS BY OTHERS.
4. SIGN PERMITTING BY OTHERS.
5. SIGN MANUFACTURE TO CONFIRM THAT ALL SIGNS COMPLY TO LOCAL CODES AND REGULATIONS.

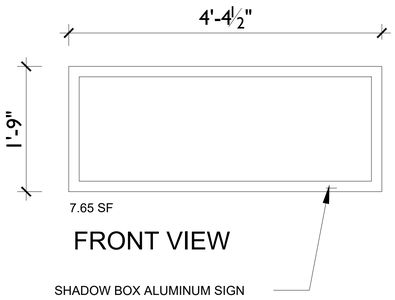

FRONT VIEW

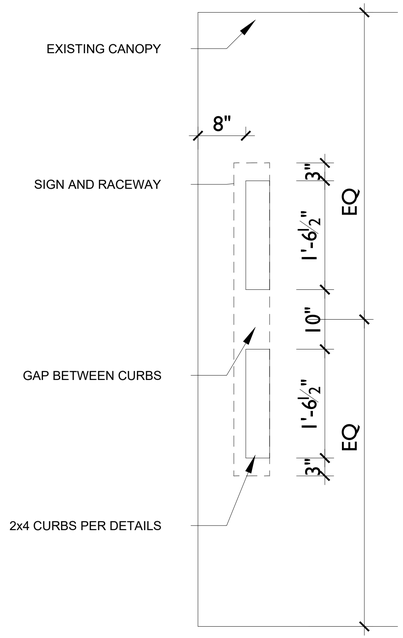

PLAN

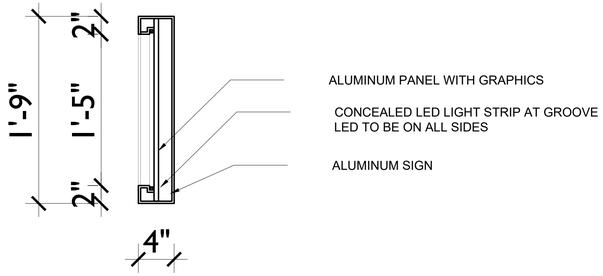

RESTAURANT SIGN SECTION

SCALE: 1 1/2"=1'-0"

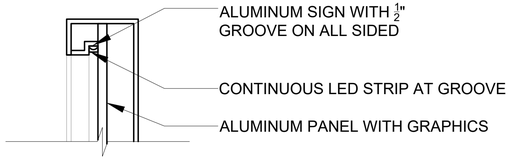

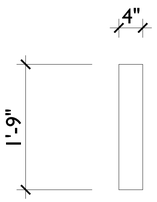

SIDE VIEW

RESTAURANT SIGN

SCALE: 1"=1'-0"

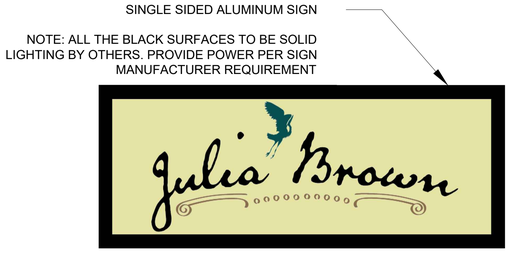

RENDERING
N.T.S

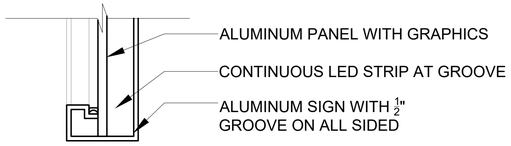

RESTAURANT SIGN DETAILS

SCALE: 3"=1'-0"

SCREENSHOT

N.T.S

SCREENSHOT

N.T.S

CHARTRES ELEVATION

SCALE: 1/8"=1'-0"

CHRIS PARDO DESIGN
ELEMENTAL ARCHITECTURE

ARRIVE HOTEL
600 Mazant Street
New Orleans, LA 70117

Revisions	Issue	Date:
	Purpose: REVISIONS	08/08/22

CONSTRUCTION DOCUMENTS

SIGNAGE

22 December 2020

IDSK1.3

© 2020 studioWTA