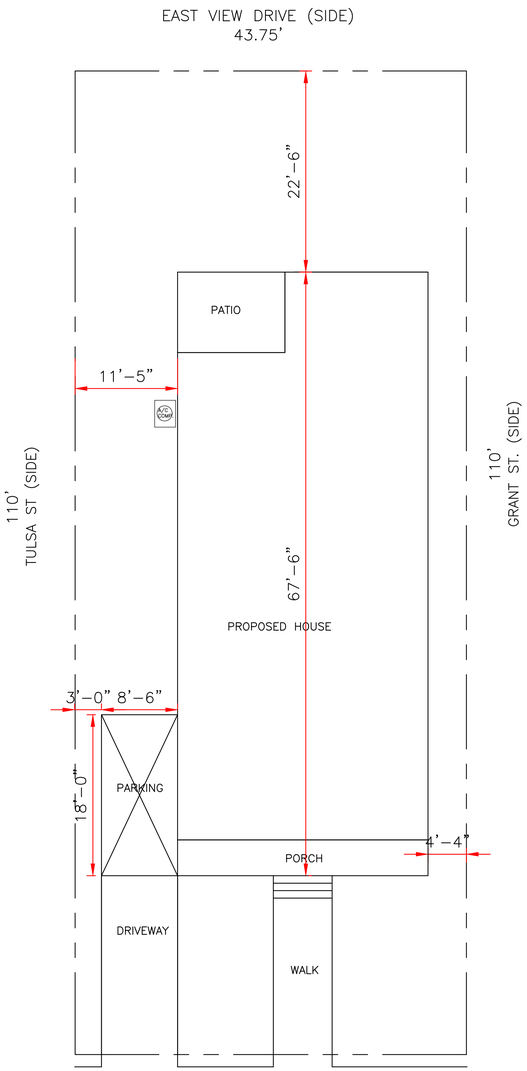

LOT# 9A
SUB: BLUM ANTIONE
ORLEANS PARISH, LA

SITE PLAN
SCALE: 1/8" = 1'-0"

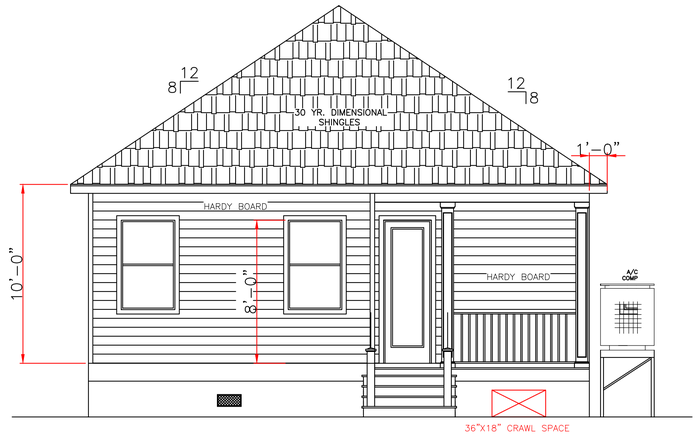

REAR ELEVATION
SCALE: 1/4" = 1'-0"

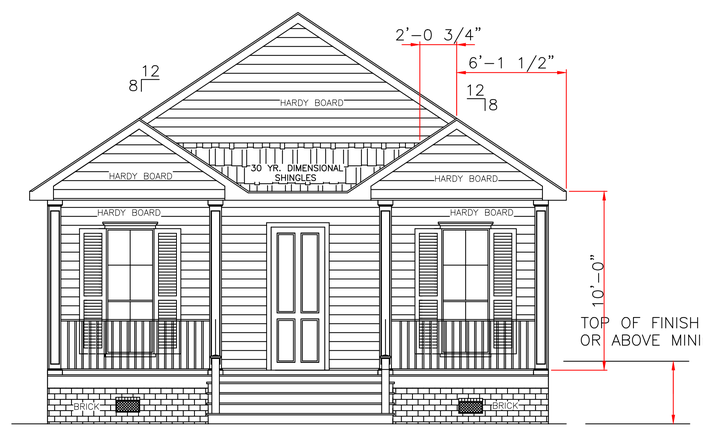

TOP OF FINISH FLOOR AT
OR ABOVE MINIMUM BASE FLOOD.

ALL MATERIALS BELOW
BASE FLOOD MUST
BE WATER RESISTANT

FRONT ELEVATION
SCALE: 1/4" = 1'-0"

WIND BORNE DEBRIS PROTECTION

WINDOWS IN BUILDING LOCATED IN WIND BORNE DEBRIS REGIONS SHALL HAVE GLAZED OPENINGS PROTECTED FROM WIND BORNE DEBRIS. WOOD STRUCTURAL PANELS WITH A MIN. THICKNESS OF 1/2" AND A MAX. SPAN OF 8 FEET SHALL BE PERMITTED FOR OPENING PROTECTION IN ONE AND TWO STORY BUILDINGS. PANELS SHALL BE PRECUT TO COVER THE GLAZED OPENINGS WITH ATTACHMENT HARDWARE PROVIDED.

CODE COMPLIANCE:

WIND SPEED 130 MPH.

1. THE 2015 INTERNATIONAL RESIDENTIAL CODE.

2. WOOD FRAME CONSTRUCTION MANUAL FOR ONE AND TWO FAMILY DWELLINGS. (WFCM).

3. INTERNATIONAL CODE COUNCIL (ICC) STANDARD FOR RESIDENTIAL CONSTRUCTION IN HIGH WIND REGIONS (ICC600).

IN THE EVENT THAT A DIMENSIONAL DISCREPANCY IN THE DRAWINGS IS DISCOVERED BY THE GENERAL CONTRACTOR, SUBCONTRACTORS, ENGINEER, CONSULTANT, OR A SUPPLIER, SAID PARTY SHALL IMMEDIATELY NOTIFY THE ARCHITECT AND SUSPEND ALL ASSOCIATED WORK UNTIL SUCH TIME THAT A PROPER DETERMINATION HAS BEEN MADE BY THE ARCHITECT, WITH APPROPRIATE INSTRUCTIONS FOR RESOLUTION OF THE ISSUE. FAILURE TO REPORT KNOWN DISCREPANCIES AND CONTINUING WITH THE WORK WITHOUT NOTIFYING THE ARCHITECT SHALL RESULT IN AN ASSUMPTION OF RESPONSIBILITY FOR CORRECTIVE WORK TO ACHIEVE THE INTENDED DESIGN.

THESE PLANS HAVE BEEN PROPERLY EXAMINED BY THE UNDERSIGNED. I HAVE DETERMINED THAT THEY COMPLY WITH THE FOLLOWING EXISTING STATE AND LOCAL BUILDING CODES FOR THE JURISDICTION IN WHICH THE RESIDENCE IS TO BE LOCATED.

LARRY TRUMBATURI
8307 LAFITTE CT. CHALMETTE, LA 70043
504-279-3508

CHARLES MCTHOMAS
DODT ST.
LOT 9A
NEW ORLEANS, LA

JOB NO 8667
DATE 10/12/21
SHEET NO 1 OF 6

CODE COMPLIANCE:

WIND SPEED 130 MPH.

1. THE 2015 INTERNATIONAL RESIDENTIAL CODE.

2. WOOD FRAME CONSTRUCTION MANUAL FOR ONE AND TWO FAMILY DWELLINGS. (WFCM).

3. INTERNATIONAL CODE COUNCIL (ICC) STANDARD FOR RESIDENTIAL CONSTRUCTION IN HIGH WIND REGIONS (ICC600).

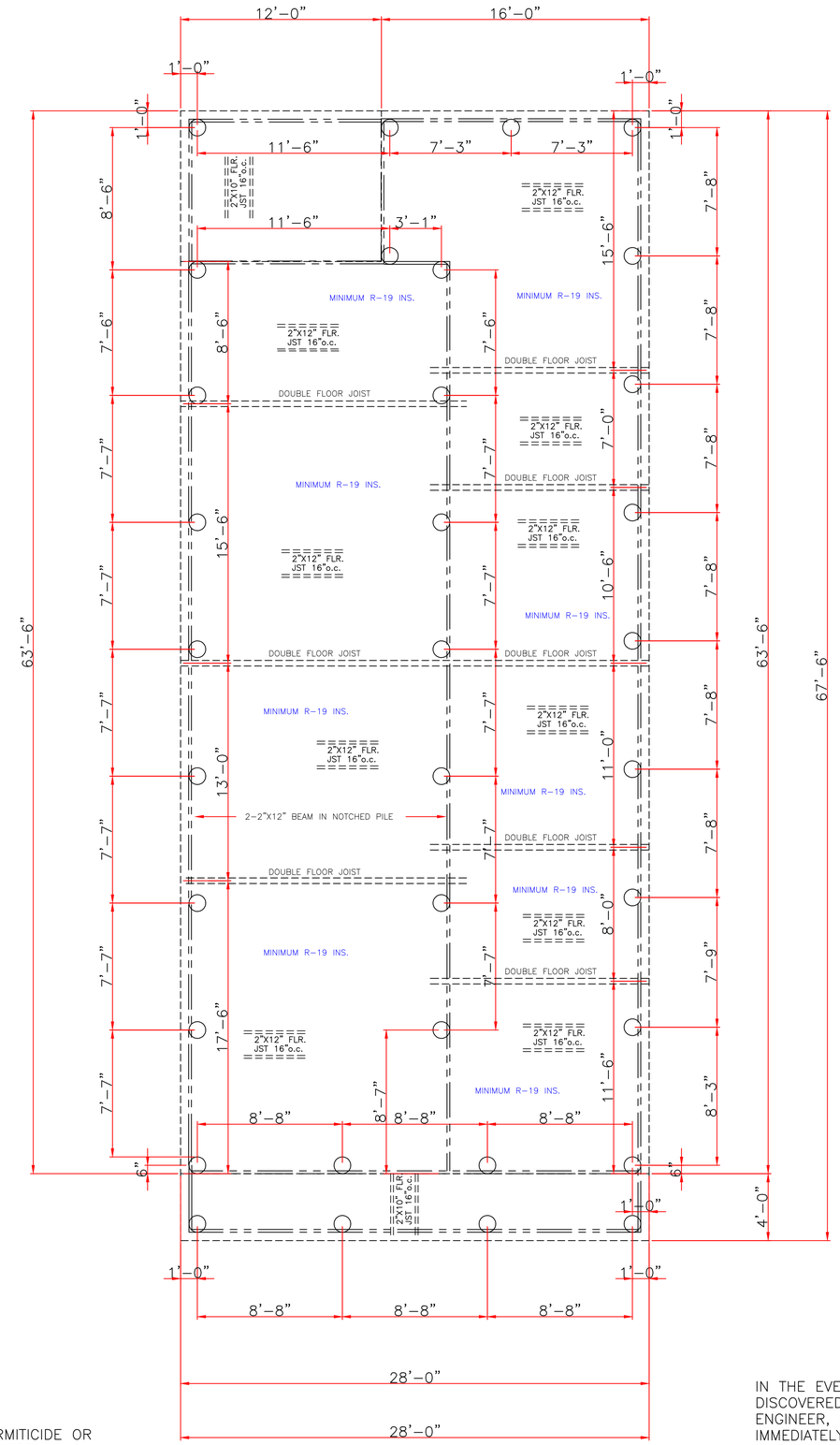

FOUNDATION PLAN

SCALE: 1/4" = 1'-0"

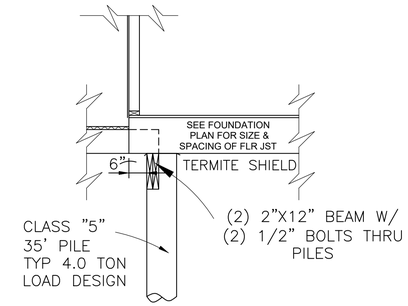

SECTION @ PORCH

SCALE: 1/2" = 1'-0"

WIND BORNE DEBRIS PROTECTION

WINDOWS IN BUILDING LOCATED IN WIND BORNE DEBRIS REGIONS SHALL HAVE GLAZED OPENINGS PROTECTED FROM WIND BORNE DEBRIS. WOOD STRUCTURAL PANELS WITH A MIN. THICKNESS OF 1/2" AND A MAX. SPAN OF 8 FEET SHALL BE PERMITTED FOR OPENING PROTECTION IN ONE AND TWO STORY BUILDINGS. PANELS SHALL BE PRECUT TO COVER THE GLAZED OPENINGS WITH ATTACHMENT HARDWARE PROVIDED.

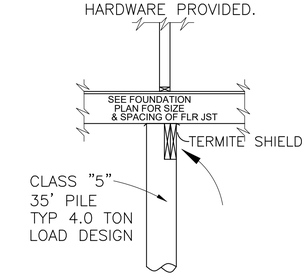

INTERIOR FOOTING DETAIL

SCALE: 1/2" = 1'

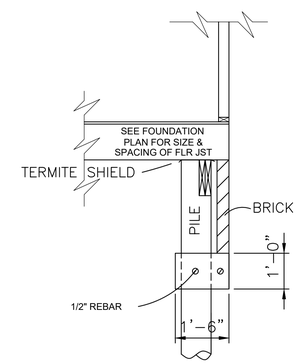

EXTERIOR BRICK DETAIL

SCALE: 1/2" = 1'-0"

OPTION

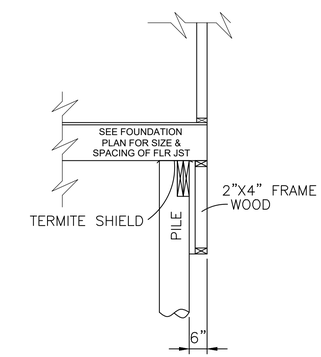

EXTERIOR WOOD DETAIL

SCALE: 1/2" = 1'-0"

OPTION

CLASS 5 35' PILE WITH 4.0 TON LOAD DESIGN DRIVEN WITH STEEL DROP HAMMER OR RAPID IMPACT HAMMER METHOD, TO REFUSAL

SOIL TREATMENT, CHEMICAL TERMITICIDE OR TEMITE SHIELDS WILL BE USED FOR TERMITE PROTECTION, BUILDER VERIFY

IN THE EVENT THAT A DIMENSIONAL DISCREPANCY IN THE DRAWINGS IS DISCOVERED BY THE GENERAL CONTRACTOR, SUBCONTRACTORS, ENGINEER, CONSULTANT, OR A SUPPLIER, SAID PARTY SHALL IMMEDIATELY NOTIFY THE ARCHITECT AND SUSPEND ALL ASSOCIATED WORK UNTIL SUCH TIME THAT A PROPER DETERMINATION HAS BEEN MADE BY THE ARCHITECT, WITH APPROPRIATE INSTRUCTIONS FOR RESOLUTION OF THE ISSUE. FAILURE TO REPORT KNOWN DISCREPANCIES AND CONTINUING WITH THE WORK WITHOUT NOTIFYING THE ARCHITECT SHALL RESULT IN AN ASSUMPTION OF RESPONSIBILITY FOR CORRECTIVE WORK TO ACHIEVE THE INTENDED DESIGN.

THESE PLANS HAVE BEEN PROPERLY EXAMINED BY THE UNDERSIGNED. I HAVE DETERMINED THAT THEY COMPLY WITH THE FOLLOWING EXISTING STATE AND LOCAL BUILDING CODES FOR THE JURISDICTION IN WHICH THE RESIDENCE IS TO BE LOCATED.

LARRY TRUMBATURI
8307 LAFITTE CT. CHALMETTE, LA 70043
504-279-3508

JOB NO 8667

CHARLES MCTHOMAS
DODT ST.
LOT 9A
NEW ORLEANS, LA

DATE 10/12/21

SHEET NO 2 OF 6

CODE COMPLIANCE:

WIND SPEED 130 MPH.

1. THE 2015 INTERNATIONAL RESIDENTIAL CODE.

2. WOOD FRAME CONSTRUCTION MANUAL FOR ONE AND TWO FAMILY DWELLINGS. (WFCM).

3. INTERNATIONAL CODE COUNCIL (ICC) STANDARD FOR RESIDENTIAL CONSTRUCTION IN HIGH WIND REGIONS (ICC600).

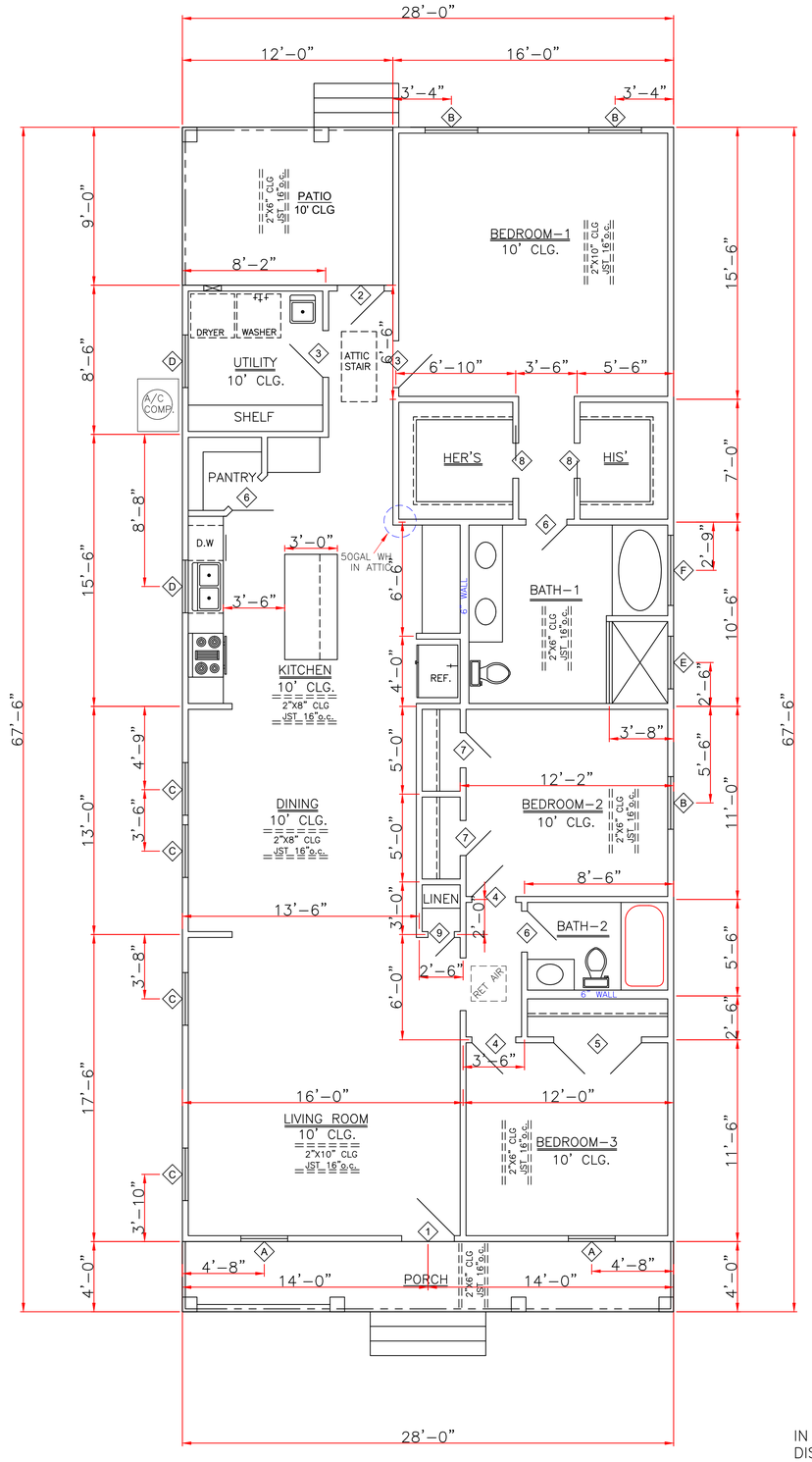

FLOOR PLAN

SCALE: 1/4" = 1'-0"

WIND BORNE DEBRIS PROTECTION

WINDOWS IN BUILDING LOCATED IN WIND BORNE DEBRIS REGIONS SHALL HAVE GLAZED OPENINGS PROTECTED FROM WIND BORNE DEBRIS. WOOD STRUCTURAL PANELS WITH A MIN. THICKNESS OF 1/2" AND A MAX. SPAN OF 8 FEET SHALL BE PERMITTED FOR OPENING PROTECTION IN ONE AND TWO STORY BUILDINGS. PANELS SHALL BE PRECUT TO COVER THE GLAZED OPENINGS WITH ATTACHMENT HARDWARE PROVIDED.

DOORS		
1	3'0"X8'0"X1 3/4"	EXT. INSUL.
2	2'8"X8'0"X1 3/4"	EXT. INSUL.
3	2'8"X8'0"X1 3/8"	INTERIOR RAISED PANEL
4	2'6"X8'0"X1 3/8"	INTERIOR RAISED PANEL
5	2-2'6"X8'0"X1 3/8"	INTERIOR RAISED PANEL PAIR
6	2'4"X8'0"X1 3/8"	INTERIOR RAISED PANEL
7	2'0"X8'0"X1 3/8"	INTERIOR RAISED PANEL
8	2'0"X8'0"X1 3/8"	INTERIOR RAISED PANEL POCKET
9	1'6"X8'0"X1 3/8"	INTERIOR RAISED PANEL

WINDOWS		
A	2'8"X7'0"	VINYL SH. 4/2 LTS
B	3'0"X5'0"	VINYL SH. 1/1 LTS
C	3'0"X6'0"	VINYL SH. 1/1 LTS
D	3'0"X4'0"	VINYL SH. 1/1 LTS
E	3'0"X1'0"	FIXED W/ SAFETY GLAZING (SECT. R308 IRC)
F	4'0"X2'0"	FIXED W/ SAFETY GLAZING (SECT. R308 IRC)

ENERGY PERFORMANCE RATING: U-FACTOR=.55; SOLAR HEAT GAIN COEFFICIANT=.35

GENERAL NOTES:

ATTIC VENTILATION WILL BE CONTINUOUS RIDGE VENTS AND PERFORATED SOFFITS. OR EQUAL

TERMITE SHIELDS WILL BE 26 GA GALVANIZED AT EACH PIER UNDER SILLS

#2 PINE LUMBER WILL BE USED FOR FRAMING LUMBER

CONTRACTOR TO REMOVE DEBRIS FROM PROPERTY

ENCLOSED AREAS BELOW FLOOD GRADE SHALL HAVE A MINIMUM OF 1 SQ. IN. PER 1 SQ. FT. OF WATER FLOW VENTING.

MINIMUM INSULATION REQUIRED
FLOORS- R-19
WALL- R-13
CEILING- R-38

BUILDING MATERIAL USED BELOW DESIGN FLOOD ELEVATION MUST BE WATER RESISTANT

WINDOWS INSTALLED IN BATHTUB ENCLOSURES LESS THAN 60" F.F.F. REQUIRE SAFETY GLAZING AND WINDOWS WITHIN 2' OF DOORS AND WITHIN 5' OF STAIRS

FLOOD VENTS WHERE APPLICABLE SHALL BE 1'-0" OR LESS ABOVE GRADE.

WINDOWS WHERE BOTTOM EDGE IS LESS THAN 18" REQUIRES SAFETY

SQUARE FOOTAGE	
LIVING	1670
PORCH	112
PATIO	108
TOTAL	1890

IN THE EVENT THAT A DIMENSIONAL DISCREPANCY IN THE DRAWINGS IS DISCOVERED BY THE GENERAL CONTRACTOR, SUBCONTRACTORS, ENGINEER, CONSULTANT, OR A SUPPLIER, SAID PARTY SHALL IMMEDIATELY NOTIFY THE ARCHITECT AND SUSPEND ALL ASSOCIATED WORK UNTIL SUCH TIME THAT A PROPER DETERMINATION HAS BEEN MADE BY THE ARCHITECT, WITH APPROPRIATE INSTRUCTIONS FOR RESOLUTION OF THE ISSUE. FAILURE TO REPORT KNOWN DISCREPANCIES AND CONTINUING WITH THE WORK WITHOUT NOTIFYING THE ARCHITECT SHALL RESULT IN AN ASSUMPTION OF RESPONSIBILITY FOR CORRECTIVE WORK TO ACHIEVE THE INTENDED DESIGN.

THESE PLANS HAVE BEEN PROPERLY EXAMINED BY THE UNDERSIGNED. I HAVE DETERMINED THAT THEY COMPLY WITH THE FOLLOWING EXISTING STATE AND LOCAL BUILDING CODES FOR THE JURISDICTION IN WHICH THE RESIDENCE IS TO BE LOCATED.

LARRY TRUMBATURI
8307 LAFITTE CT. CHALMETTE, LA 70043
504-279-3508

JOB NO 8667

CHARLES MCTHOMAS
DODT ST.
LOT 9A
NEW ORLEANS, LA

DATE 10/12/21

SHEET NO 3 OF 6

CODE COMPLIANCE:

WIND SPEED 130 MPH.

1. THE 2015 INTERNATIONAL RESIDENTIAL CODE.

2. WOOD FRAME CONSTRUCTION MANUAL FOR ONE AND TWO FAMILY DWELLINGS. (WFCM).

3. INTERNATIONAL CODE COUNCIL (ICC) STANDARD FOR RESIDENTIAL CONSTRUCTION IN HIGH WIND REGIONS (ICC600).

WIND BORNE DEBRIS PROTECTION

WINDOWS IN BUILDING LOCATED IN WIND BORNE DEBRIS REGIONS SHALL HAVE GLAZED OPENINGS PROTECTED FROM WIND BORNE DEBRIS. WOOD STRUCTURAL PANELS WITH A MIN. THICKNESS OF 1/2" AND A MAX. SPAN OF 8 FEET SHALL BE PERMITTED FOR OPENING PROTECTION IN ONE AND TWO STORY BUILDINGS. PANELS SHALL BE PRECUT TO COVER THE GLAZED OPENINGS WITH ATTACHMENT HARDWARE PROVIDED.

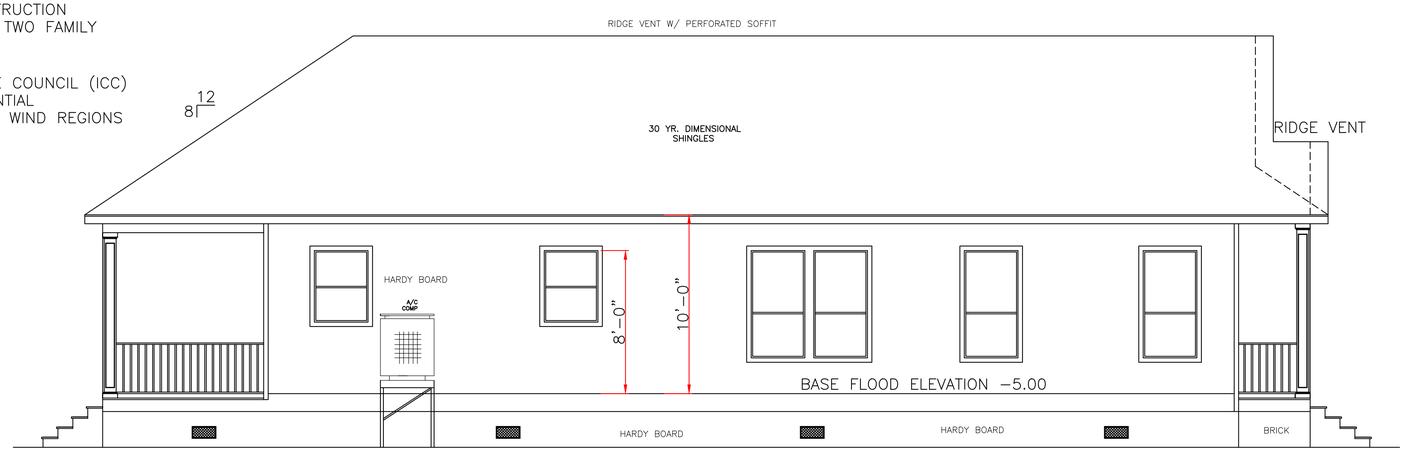

LEFT ELEVATION
SCALE: 1/4" = 1'-0"

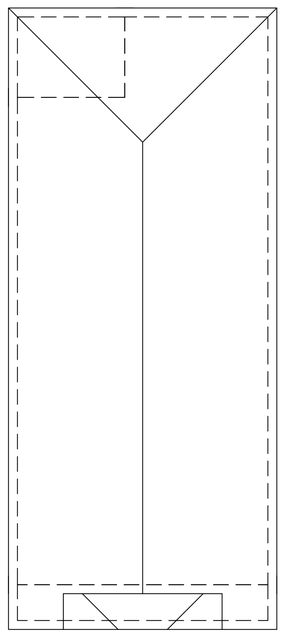

ROOF PLAN
SCALE: 1/8" = 1'-0"

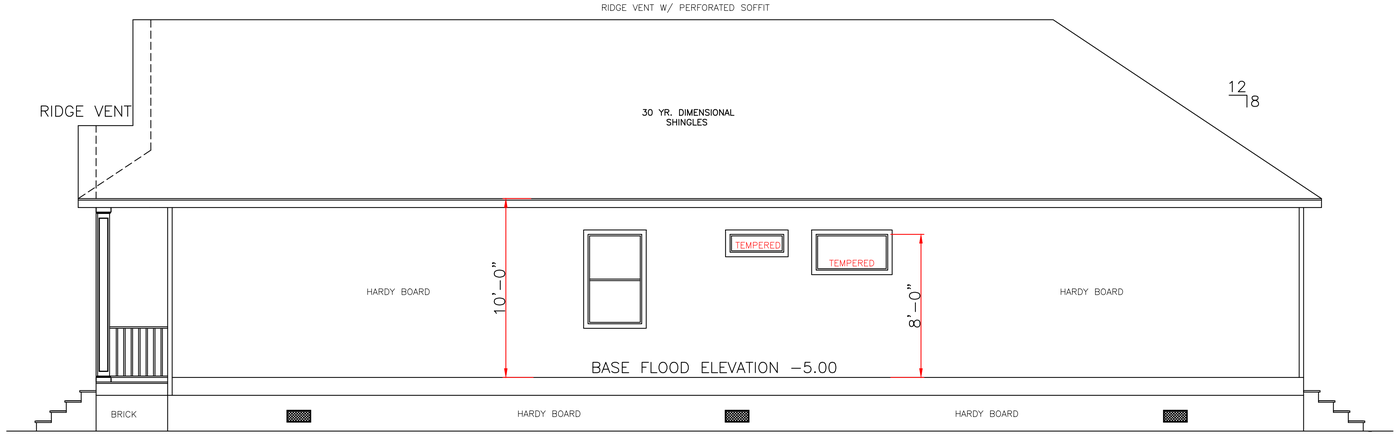

RIGHT ELEVATION
SCALE: 1/4" = 1'-0"

ALL MATERIALS BELOW BASE FLOOD MUST BE WATER RESISTANT

RIGHT ELEVATION
SCALE: 1/4" = 1'-0"

ALL MATERIALS BELOW BASE FLOOD MUST BE WATER RESISTANT

IN THE EVENT THAT A DIMENSIONAL DISCREPANCY IN THE DRAWINGS IS DISCOVERED BY THE GENERAL CONTRACTOR, SUBCONTRACTORS, ENGINEER, CONSULTANT, OR A SUPPLIER, SAID PARTY SHALL IMMEDIATELY NOTIFY THE ARCHITECT AND SUSPEND ALL ASSOCIATED WORK UNTIL SUCH TIME THAT A PROPER DETERMINATION HAS BEEN MADE BY THE ARCHITECT, WITH APPROPRIATE INSTRUCTIONS FOR RESOLUTION OF THE ISSUE. FAILURE TO REPORT KNOWN DISCREPANCIES AND CONTINUING WITH THE WORK WITHOUT NOTIFYING THE ARCHITECT SHALL RESULT IN AN ASSUMPTION OF RESPONSIBILITY FOR CORRECTIVE WORK TO ACHIEVE THE INTENDED DESIGN.

THESE PLANS HAVE BEEN PROPERLY EXAMINED BY THE UNDERSIGNED. I HAVE DETERMINED THAT THEY COMPLY WITH THE FOLLOWING EXISTING STATE AND LOCAL BUILDING CODES FOR THE JURISDICTION IN WHICH THE RESIDENCE IS TO BE LOCATED.

LARRY TRUMBATURI
8307 LAFITTE CT. CHALMETTE, LA 70043
504-279-3508

CHARLES MCTHOMAS
DODT ST.
LOT 9A
NEW ORLEANS, LA

JOB NO 8667
DATE 10/12/21
SHEET NO 4 OF 6

ELECTRICAL NOTES

1. AFCI PROTECTION SHALL BE PROVIDED FOR DINING ROOMS, FAMILY ROOMS, LIVING ROOMS, HALLWAYS, CLOSETS, BEDROOMS, ETC.

2. SMOKE DETECTORS: (A)SHALL BE INSTALLED IN EACH SLEEPING ROOM. (B) SHALL BE INSTALLED OUTSIDE, IN THE VICINITY OF EACH SLEEPING ROOM. (C) SHALL BE 120 VOLT, HARDWIRED, INTERCONNECTED, WITH A BATTERY BACKUP. (D) SHALL NOT BE INSTALLED WITHIN 36 INCHES OF A RETURN AIR GRILLE OR ANY PADDLE FAN BLADE.
3. KITCHEN: (A) ALL RECEPTACLES OVER COUNTERTOP SHALL BE GFI PROTECTED REGARDLESS OF DISTANCE FROM THE SINK. (B) THE DISHWASHER SHALL BE CONNECTED BY MEANS OF AN APPLIANCE CORD TO A RECEPTACLE UNDER THE SINK. THE RECEPTACLE WILL NOT BE GFI PROTECTED.
4. BATHROOMS: (A) ALL RECEPTACLES SHALL BE GFI PROTECTED. (B) LIGHTS OVER BATHTUBS SHALL HAVE COVERS THAT ARE LISTED FOR "DAMP LOCATION" (C) LIGHTS OVER SHOWERS SHALL HAVE COVERS LISTED FOR "WET LOCATION."
5. EXTERIOR RECEPTACLES SHALL ALL BE GFI PROTECTED AND SHALL HAVE WEATHERPROOF COVERS.
6. A RECEPTACLE (NOT SHOWN ON THE PLAN) WILL BE INSTALLED ON THE EXTERIOR WALL WITHIN 25 FEET OF THE AIR CONDITIONING EQUIPMENT.

LEGEND	
	CEILING FAN
	RECESSED LIGHTS
	WALL SWITCH 15A, 120V, SINGLE POLE SINGLE THROW, MOUNT AT 60" AFF
3	3 WAY WALL SWITCH 15A, 120V. MOUNT AT 60" AFF
	CEILING LIGHT INCANDESCENT, 2-60 WATT
VENT	VENT/ LIGHT FIXTURE
	CARBON MONOXIDE DETECTOR
W.P.	110 VOLT WATER PROOF OUTLET
	FLOOD LIGHTS
	110 VOLT SMOKE DETECTOR
	110 VOLT OUTLET
	HANGING LIGHT FIXTURE

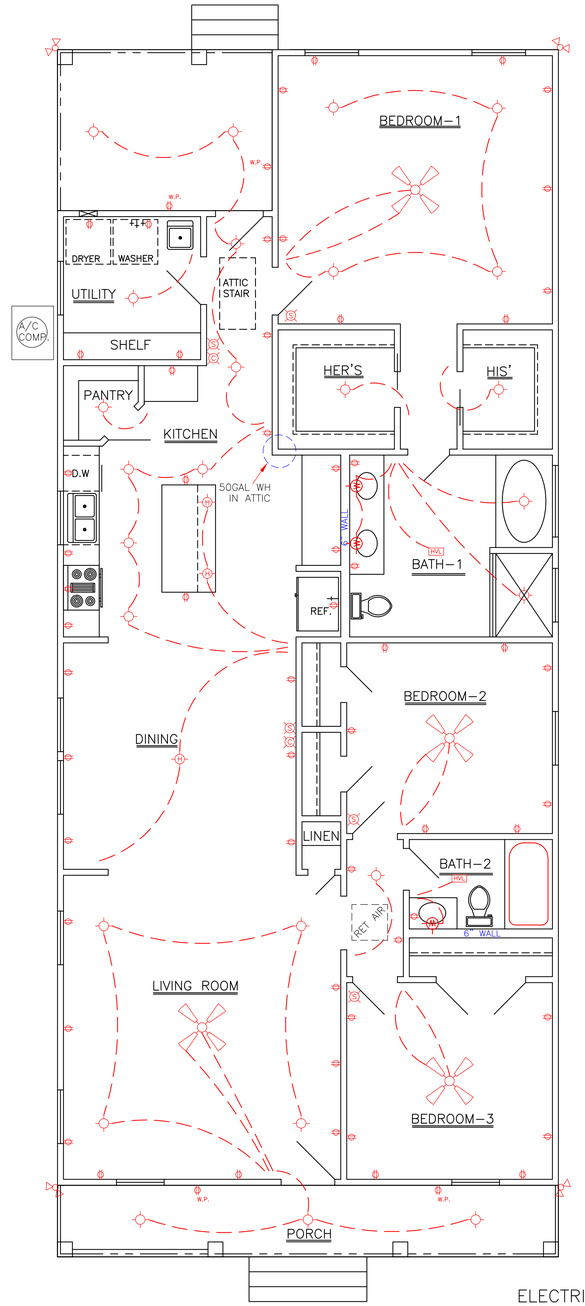

ELECTRICAL PLAN

SCALE: 1/4" = 1'-0"

WIND BORNE DEBRIS PROTECTION

WINDOWS IN BUILDING LOCATED IN WIND BORNE DEBRIS REGIONS SHALL HAVE GLAZED OPENINGS PROTECTED FROM WIND BORNE DEBRIS. WOOD STRUCTURAL PANELS WITH A MIN. THICKNESS OF 1/2" AND A MAX. SPAN OF 8 FEET SHALL BE PERMITTED FOR OPENING PROTECTION IN ONE AND TWO STORY BUILDINGS. PANELS SHALL BE PRECUT TO COVER THE GLAZED OPENINGS WITH ATTACHMENT HARDWARE PROVIDED.

CODE COMPLIANCE:

WIND SPEED 130 MPH.

1. THE 2015 INTERNATIONAL RESIDENTIAL CODE.

2. WOOD FRAME CONSTRUCTION MANUAL FOR ONE AND TWO FAMILY DWELLINGS. (WFCM).

3. INTERNATIONAL CODE COUNCIL (ICC) STANDARD FOR RESIDENTIAL CONSTRUCTION IN HIGH WIND REGIONS (ICC600).

IN THE EVENT THAT A DIMENSIONAL DISCREPANCY IN THE DRAWINGS IS DISCOVERED BY THE GENERAL CONTRACTOR, SUBCONTRACTORS, ENGINEER, CONSULTANT, OR A SUPPLIER, SAID PARTY SHALL IMMEDIATELY NOTIFY THE ARCHITECT AND SUSPEND ALL ASSOCIATED WORK UNTIL SUCH TIME THAT A PROPER DETERMINATION HAS BEEN MADE BY THE ARCHITECT, WITH APPROPRIATE INSTRUCTIONS FOR RESOLUTION OF THE ISSUE. FAILURE TO REPORT KNOWN DISCREPANCIES AND CONTINUING WITH THE WORK WITHOUT NOTIFYING THE ARCHITECT SHALL RESULT IN AN ASSUMPTION OF RESPONSIBILITY FOR CORRECTIVE WORK TO ACHIEVE THE INTENDED DESIGN.

THESE PLANS HAVE BEEN PROPERLY EXAMINED BY THE UNDERSIGNED. I HAVE DETERMINED THAT THEY COMPLY WITH THE FOLLOWING EXISTING STATE AND LOCAL BUILDING CODES FOR THE JURISDICTION IN WHICH THE RESIDENCE IS TO BE LOCATED.

LARRY TRUMBATURI
8307 LAFITTE CT. CHALMETTE, LA 70043
504-279-3508

CHARLES MCTHOMAS
DODT ST.
LOT 9A
NEW ORLEANS, LA

JOB NO	DATE	SHEET NO
8667	10/12/21	5 OF 6

WIND BORNE DEBRIS PROTECTION

WINDOWS IN BUILDING LOCATED IN WIND BORNE DEBRIS REGIONS SHALL HAVE GLAZED OPENINGS PROTECTED FROM WIND BORNE DEBRIS. WOOD STRUCTURAL PANELS WITH A MIN. THICKNESS OF 1/2" AND A MAX. SPAN OF 8 FEET SHALL BE PERMITTED FOR OPENING PROTECTION IN ONE AND TWO STORY BUILDINGS. PANELS SHALL BE PRECUT TO COVER THE GLAZED OPENINGS WITH ATTACHMENT HARDWARE PROVIDED.

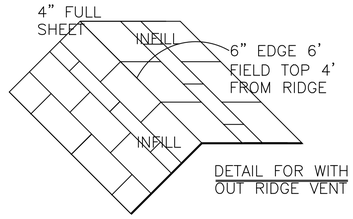

DETAIL FOR WITH OUT RIDGE VENT

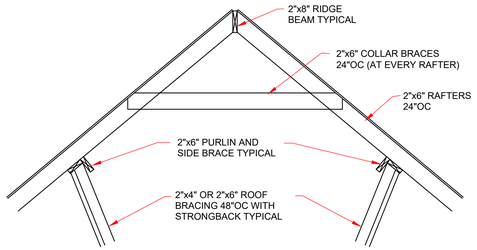

TYPICAL ROOF BRACING DETAIL

NOT TO SCALE

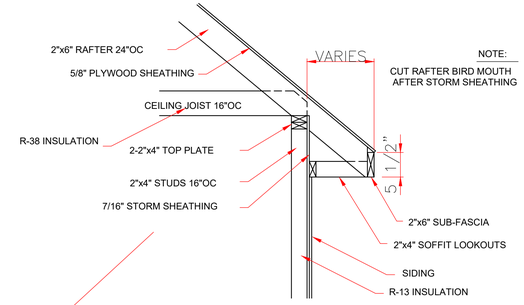

NOTE:
CUT RAFTER BIRD MOUTH AFTER STORM SHEATHING

ROOF SOFFIT DETAIL

SCALE: 3/4" = 1'-0"

WITH FRAME CONSTRUCTION

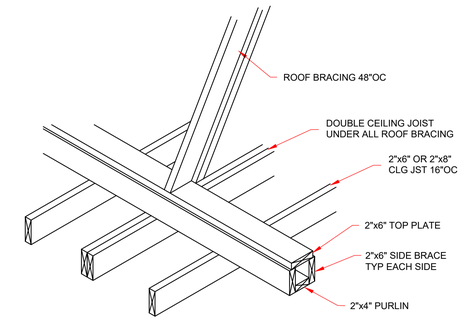

STRONGBACK DETAIL
FOR 2"x6" OR 2"x8" JOIST

NOT TO SCALE

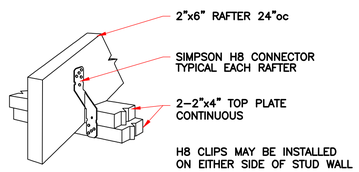

RAFTER TO TOP PLATES

NOT TO SCALE

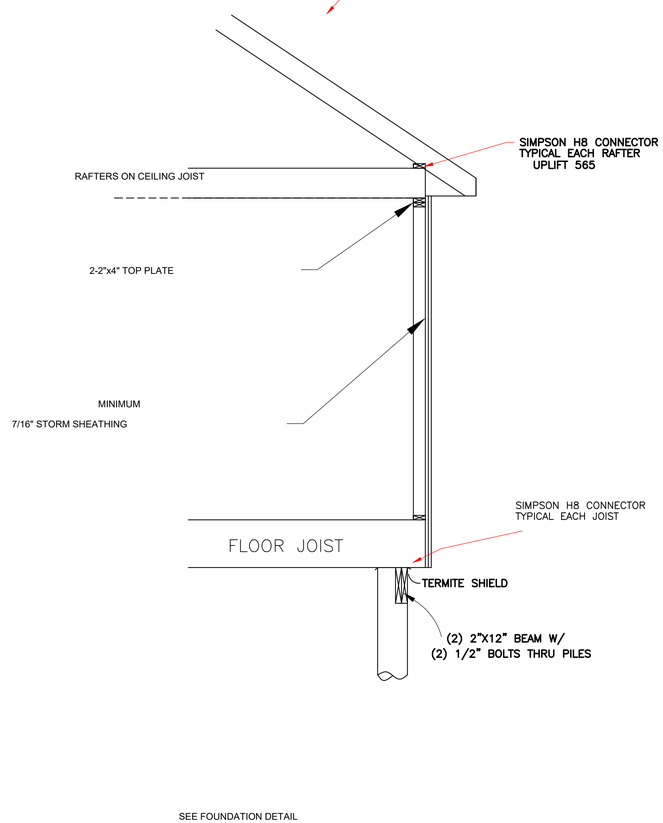

CONTINUOUS LOAD PATH

1/2" SCALE

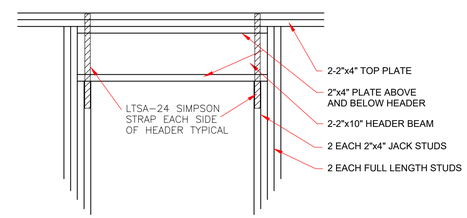

TYPICAL EXTERIOR DOOR
OR WINDOW HEADER

SCALE: 3/4" = 1'-0"

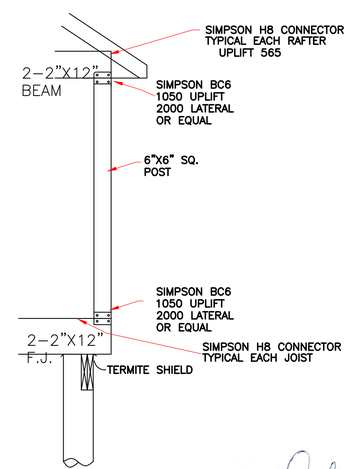

COLUMN SECTION

NOT TO SCALE

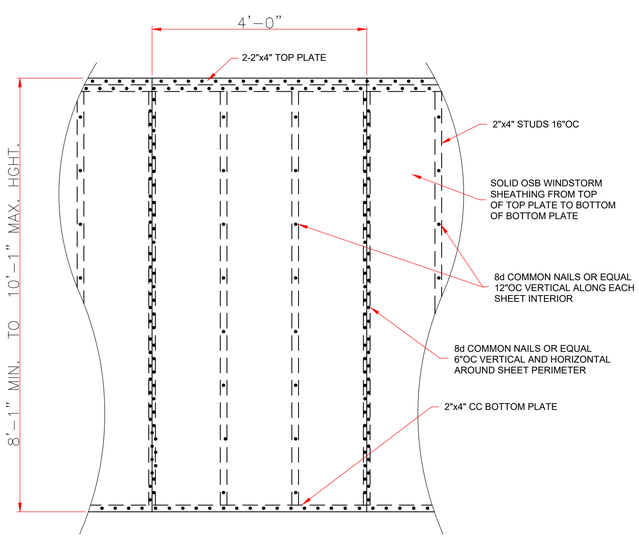

7/16" STORM SHEATHING
TYPICAL ALL EXTERIOR WALLS

SCALE: 3/4" = 1'-0"

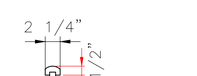

HANDRAIL
DETAIL PLAN

SCALE: 1" = 1"

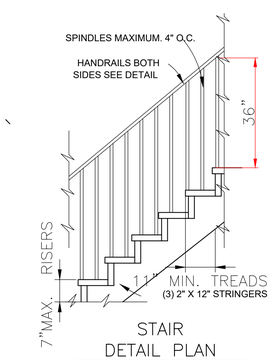

STAIR
DETAIL PLAN

SCALE: 1/2" = 1'-0"

CODE COMPLIANCE:

WIND SPEED 130 MPH.

1. THE 2015 INTERNATIONAL RESIDENTIAL CODE.

2. WOOD FRAME CONSTRUCTION MANUAL FOR ONE AND TWO FAMILY DWELLINGS. (WFCM).

3. INTERNATIONAL CODE COUNCIL (ICC) STANDARD FOR RESIDENTIAL CONSTRUCTION IN HIGH WIND REGIONS (ICC600).

IN THE EVENT THAT A DIMENSIONAL DISCREPANCY IN THE DRAWINGS IS DISCOVERED BY THE GENERAL CONTRACTOR, SUBCONTRACTORS, ENGINEER, CONSULTANT, OR A SUPPLIER, SAID PARTY SHALL IMMEDIATELY NOTIFY THE ARCHITECT AND SUSPEND ALL ASSOCIATED WORK UNTIL SUCH TIME THAT A PROPER DETERMINATION HAS BEEN MADE BY THE ARCHITECT, WITH APPROPRIATE INSTRUCTIONS FOR RESOLUTION OF THE ISSUE. FAILURE TO REPORT KNOWN DISCREPANCIES AND CONTINUING WITH THE WORK WITHOUT NOTIFYING THE ARCHITECT SHALL RESULT IN AN ASSUMPTION OF RESPONSIBILITY FOR CORRECTIVE WORK TO ACHIEVE THE INTENDED DESIGN.

THESE PLANS HAVE BEEN PROPERLY EXAMINED BY THE UNDERSIGNED. I HAVE DETERMINED THAT THEY COMPLY WITH THE FOLLOWING EXISTING STATE AND LOCAL BUILDING CODES FOR THE JURISDICTION IN WHICH THE RESIDENCE IS TO BE LOCATED.

LARRY TRUMBATURI
8307 LAFITTE CT. CHALMETTE, LA 70043
504-279-3508

CHARLES MCTHOMAS
DODT ST.
LOT 9A
NEW ORLEANS, LA

JOB NO	DATE	SHEET NO
8667	10/12/21	6 OF 6